Installation
Operation
Maintenance

Air-Cooled Condenser
Scroll Compressor
20 to 150 TR
50 / 60 Hz

Models: 50 or 60 Hz

CGAD020	CGAD040
CGAD025	CGAD050
CGAD030	CGAD060
CGAD070	CGAD100
CGAD080	CGAD120
CGAD090	CGAD150

SAFETY WARNING

Only qualified personnel should install and service the equipment. The installation, starting up, and servicing of heating, ventilating, and air-conditioning equipment can be hazardous and requires specific knowledge and training. Improperly installed, adjusted or altered equipment by an unqualified person could result in death or serious injury. When working on the equipment, observe all precautions in the literature and on the tags, stickers, and labels that are attached to the equipment.

October 2015

CGAD-SVN02B-EN

Important Notice

IMPORTANT:
Dimensional measuring units on this catalog are on milimitres (mm). (Exept for those locally referencied).

Refrigerant Emission Control
The conservation and reduction of gas emissions should be reached by following the operational and service procedures recommended by Trane, with special attention to the following:

The refrigerant used in any type of air-conditioning equipment should be recuperated and/or recycled to be used again, captured or completely destroyed whenever it is removed from the equipment. **It should never be released into the atmosphere.**

Always consider the possibility of recycling or reprocessing the refrigerant transferred before beginning the recuperation by any method. Questions about recuperated refrigerants and acceptable qualities are described in norm ARI 700.
Use approved and safe cylinders. Comply with all the applicable safety and transportation norms when transporting the refrigerant containers.

In order to minimize emissions when transferring the refrigerant gas, use recycling equipment. Always use methods that make the lowest vacuum possible when recuperating and condensing the refrigerant inside the cylinder.

Important:
Since Trane do Brasil has continual development of its products as a policy, it reserves the right to change its specifications and drawings without prior notice. The installation and maintenance of the equipment specified in this manual should be done by qualified technicians and/or technicians approved by Trane. The lack of following and/or adopting the procedures presented in this manual could imply in the product losing its warranty.

Contents

Model Number

C	G	A	D	1	5	0	J	B	A	0	N	2	N	N	A	N	0	N	N	N	N	N	N	N	N	0	N	P	0	0	0	N
1	2	3	4	5	6	7	8	9	10	11	12	13	14	15	16	17	18	19	20	21	22	23	24	25	26	27	28	29	30	31	32	33

Digits 1, 2 - Unit Model
CG = "Cold Generator" Scroll Chiller

Digit 3 - Unit Type
A = Air Cooled

Digit 4 - Model Series
D = Sequence D

Digits 5, 6 e 7 - Nominal Capacity
020 = 20 Ton.
025 = 25 Ton.
030 = 30 Ton.
040 = 40 Ton.
050 = 50 Ton.
060 = 60 Ton.
070 = 70 Ton.
080 = 80 Ton.
090 = 90 Ton.
100 = 100 Ton.
120 = 120 Ton.
150 = 150 Ton.

Digit 8 - Unit Voltage
C = 220/60/3
J = 380/60/3
D = 380-400/50/3
4 = 440-460/60/3

Digit 9 - Manufacturing Location
B = Curitiba Plant - Brazil

Digits 10,11 - Sequence of Modifi. minor of Project
A0 - Sequence A0 (Defined by factory)

Digit 12 - Certifying Agency
N = No certification

Digit 13 - Refrigerant Type
2 = R22
4 = R407c

Digit 14 - Expansion Valve type
N = Thermostatic

Digit 15 - Evaporator Application
N = Standard Cooling (40 - 60°F)

Digit 16 - Coil Type
A = Aluminium fins
S = Yellow Fin

Digit 17 - Piping Configuration
N = Standard
A = Service valves on suction and discharge lines

Digit 18 - Digit Reserved
0 = Reserved

Digit 19 - Feed Type
N = Terminal Block
D = Disconnector Key
C = Circuit Breaker

Digit 20 - Remote Operation Interface
N = No Remote Interface
C = Tracer Comm3 Interface
L = Comm5 - LonTalk Compatible (LCI-C) Interface

Digit 21 - Input controls
N = No controls
R = External Leaving Water Setpoint

Digit 22 - Output controls
N = No controls
A = Alarm Relay Output

Digit 23 - Electrical Accessories
N = No acessories

Digit 24 - Control Panel Accessories
N = No acessories

Digit 25 - Protection panels
N = No Protection panels

Digit 26 - Installation accessories
N = Without Installation accessories
R = Neoprene Vibration isolators
F = Adapter Kit for Flange
G = Isolator and Flange adapter kit

Digit 27 - Digit Reserved
0 = Reserved

Digit 28 - Digit Reserved
0 = Reserved

Digit 29 - Language - Literature/Labels
P = Portuguese/Spanish

Digit 30 - Digit Reserved
0 = Reserved

Digit 31 - Digit Reserved
0 = Reserved

Digit 32 - Digit Reserved
0 = Reserved

Digit 33 - Product Type
N = Standard
Z = Special

The product's code describes the configuration, capacity, and optional characteristics. It is very important to indicate the correct order of the equipment's code in order to avoid future problems when delivering them. Above you will find the description of each digit that makes up the product code.

General Data

Table 01 - General Data - CGAD 20-150 TR - 50 or 60 Hz

Model (1)		CGAD020	CGAD025	CGAD030	CGAD040	CGAD050	CGAD060	CGAD070	CGAD080	CGAD090	CGAD100	CGAD120	CGAD150
60 Hz													
Capacity	Tons	17,9	21,4	26,5	36,1	42,8	52,6	65,7	76,2	82,6	95,3	116,8	144,0
System KW (3)		20,0	27,2	30,7	41,3	53,9	61,6	71,8	82,2	93,9	106,5	135,3	156,5
Nominal Amps (2)	A	54,0	68,0	78,0	97,0	123,0	142,0	163,0	192,0	210,0	255,0	295,0	376,0
Efficiency (3)	E.E.R.	10,8	9,4	10,4	10,5	9,5	10,2	11,0	11,1	10,5	10,7	10,4	11,0
	KW/TR	1,115	1,273	1,157	1,143	1,258	1,171	1,093	1,079	1,137	1,118	1,158	1,087
50 Hz													
Capacity	Tons	15,5	18,6	23,0	31,2	37,2	45,5	56,5	65,4	71,2	85,2	104,7	128,6
System KW (3)		16,8	23,0	25,8	34,6	45,6	51,8	59,9	68,9	78,4	95,4	121,0	140,5
Nominal Amps (4)	A	45,0	57,0	65,0	80,0	110,0	116,0	130,0	150,0	170,0	190,0	225,0	284,0
Efficiency (3)	E.E.R.	11,1	9,7	10,7	10,8	9,8	10,6	11,3	11,4	10,9	10,7	10,4	11,0
	KW/TR	1,086	1,238	1,123	1,109	1,227	1,137	1,060	1,053	1,102	1,119	1,155	1,093
Compressor													
Model (7)		**SM125**	**SM185 SM125**	**SM185**	**SM125**	**SM185 SM125**	**SM185**	**SM185 SM125**	**SM185 SM125**	**SM185**	SY300	SY240	SY300
Type		Scroll	Scroll	Scroll	Scroll	Scroll	Scroll	Scroll	Scroll	Scroll	Scroll	Scroll	Scroll
Quantity		2	1 / 1	2	4	2 / 2	4	**2 / 4**	4 / 2	6	4	6	6
Nominal Capacity	Tons	10	15/10	15/15	10	15/10	15	15 / 10	15 / 10	15	25	20	25
Evaporator													
Water Storage	Liters	44	41	62	52	79	143	151	143	122	122	173	277
Min. water flow rate	m^3/h	5,5	6,8	8,2	10,9	13,6	16,4	21,8	27,3	27,3	32,7	40,9	49,1
Max. water flow rate	m^3/h	16,4	20,4	24,5	32,7	40,9	49,1	65,4	81,8	81,8	98,1	122,7	147,2
Inlet connection		2"	2"	2 1/2"	2 1/2"	3"	4"	4"	4"	4"	4"	6"	6"
Outlet connection		2"	2"	2 1/2"	2 1/2"	3"	4"	4"	4"	4"	4"	6"	6"
Condenser													
Type		Aluminum fins, 3/8"- OD copper tubes											
No. of coils		2	2	2	4	4	4	4	4	4	4	4	4
Total face area	m^2	4,7	4,7	4,7	8,5	11,0	11,0	14,0	14,7	14,7	13,1	16,9	19,5
Fins per inches		16	16	14	16	16	16	14	14	14	16	16	16
No. of rows		2	2	3	2	2	2	3	3	3	3	3	3
Fans													
Quantity		2	3	3	4	6	6	6	8	8	6	8	10
Diameter	mm	762	762	762	762	762	762	762	762	762	762	762	762
Air flow rate	m^3/h	32.620	45.870	44.170	64.560	95.140	95.140	97.690	122.330	122.330	98.118	130.824	163.530
RPM	RPM	1140	1140	1140	1140	1140	1140	1140	1140	1140	1140	1140	1140
Motor power	KW	1,12	1,12	1,12	1,12	1,12	1,12	1,12	1,12	1,12	1,12	1,12	1,12
Transmission type		Direct	Direct	Direct	Direct	Direct	Direct	Direct	Direct	Direct	Direct	Direct	Direct
General Data													
Height	mm	1840,5	1840,5	1840,5	2190,5	2190,5	2190,5	2190,5	2190,5	2190,5	2376,0	2376,0	2376,0
Length (5)	mm	2195,0	2195,0	2195,0	2389,0	2989,0	2989,0	3695,0	3903,0	3903,0	3425,0	4949,0	4949,0
Width	mm	1350,0	1700,0	1700,0	1880,0	1880,0	1880,0	1880,0	1880,0	1880,0	2242,0	2242,0	2242,0
Footprint area (6)	m^2	2,700	3,400	3,400	3,940	5,250	5,250	6,580	6,970	6,970	7,237	10,654	10,654
Refrigerant type	Standard	R-22	R-22	R-22	R-22	R-22	R-22	R-22	R-22	R-22	R-22	R-22	R-22
	Optional	R-407C	R-407C	R-407C	R-407C	R-407C	R-407C	R-407C	R-407C	R-407C	R-407C	R-407C	R-407C
No. of circuits		1	1	1	2	2	2	2	2	2	2	2	2
Capacity stages		50/100	**40/100**	50/100	25 / 50	**20 / 40**	25 / 50	**29/57**	**31/63**	**33/67**	25/50	**17/33**	**17/33**
					75 / 100	70 / 100	75 / 100	**79/100**	**81/100**	**83/100**	75/100	**67/100**	**67/100**
Operating weight	Kg	1340	1420	1480	1910	2210	2500	3000	3240	3220	3775	4135	4653
Shipping weight	Kg	1300	1380	1420	1860	2130	2360	2850	3100	3100	3653	3962	4376

Notes:
(1) Data based on operational conditions established by standard ARI 550/590-03.
(2) MCA values referes to 380 / 60 Hz power supply.
(3) Ratings based on global consumption (compressors and fans).
(4) MCA values referes to 380 / 50 Hz power supply.
(5) These measurements take into consideration the depth of the electrical frame attached to the equipment.
(6) These measurements of floor space do not take into consideration the base of the electrical frame attached to the equipment.
(7) The compressor models refers to R22 (CGAD020-090) refrigerant. This manual refers to the actualy desenvolved models.
(8) The adapters for Victaulic connection type are not provided in standard option.
(9) Operating Weight includes refrigerant and water weight.
(10) Shipping Weight includes only refrigerant weight.

Unit Inspection

Unit Inspection
Upon receiving the unit at the installation site, proceed as follows:

- Make sure that the data on the nameplate are the same as the data contained on the sales order and shipping invoice (including electrical data).
- Make sure that the local power supply conditions comply with the specifications on the identification plate.
- Carefully inspect the unit for damages occurred during transportation. Report any damage or material shortage immediately to the carrier. Make a "unit damage" on the carrier's delivery receipt. Specify the type and extend of damage.
- Notify Trane do Brasil and/or the installation company about the damages and the actions required for repairs. Do not repair the unit until the damages have been inspected.

Storage
If the unit cannot be installed in its permanent location at the time of delivery, store it in a safe place, and protect it from exposure to the wheater and other factors that may damage it. Storage, as well as inappropriate moving of the equipment, will imply in the equipment losing its warranty.
Instructions for proper installation

Consider the following items for a correct installation before placing the unit in its location:
- The floor and unit base should be level, solid, and strong enough to bear the weight of the unit and its accessories. Level or repair the floor at the location where the unit will be installed before placing it.
- Make sure units have rubber skids or vibration isolators.
- Provide the minimum clearances recommended for routine maintenance and services; see page 12 of this manual.
- The same distances apply in case of various units together.
- Provide the electrical installation. The units are designed so that they can receive electrical hookups from either side.
- Make sure there is enough space for the piping and to remove the covers.
- The supply of electrical power should comply with the Norm NBR 5410 and local and/or NEC codes.
- The installer should provide and install the hydraulic piping to connect the air-conditioning units to the CGAD liquid chiller.

General Safety
CGAD units are designed to work safely and in a reliable manner when operated according to the safety norms. The system works with electrical, mechanical, water and gas pressure components, as well as many other components that can cause personal damage to people and equipment if they do not comply with the needed safety norms.

Therefore, only specialized and/or Trane-authorized installers should carry out installation, start-up, and maintenance on this type of equipment.

Follow all the safety regulations related to the work and the warning signs on the stickers placed on the units, and always use appropriate tools and equipment.

Identifying Danger

WARNING!

Warnings appear at appropriate locations throughout this manual in order to alert operators and service personnel about situations of potential risk that COULD result in severe personal injury or damage to the equipment if safety regulations are not followed.

CAUTION:

Cautions appear at appropriate locations throughout this manual in order to alert operators and service personnel about situations of potential risk that could damage the equipment or the environment.

General Information

Identification labels
The unit identification labels CGAD are fixed in surface foreign of door the control Panel. The plates of identification the compressor are fixed on own compressor.
See figure the front view/ side external the CGAD. For location and identification of the same.

Fig. 01 - Identification labels

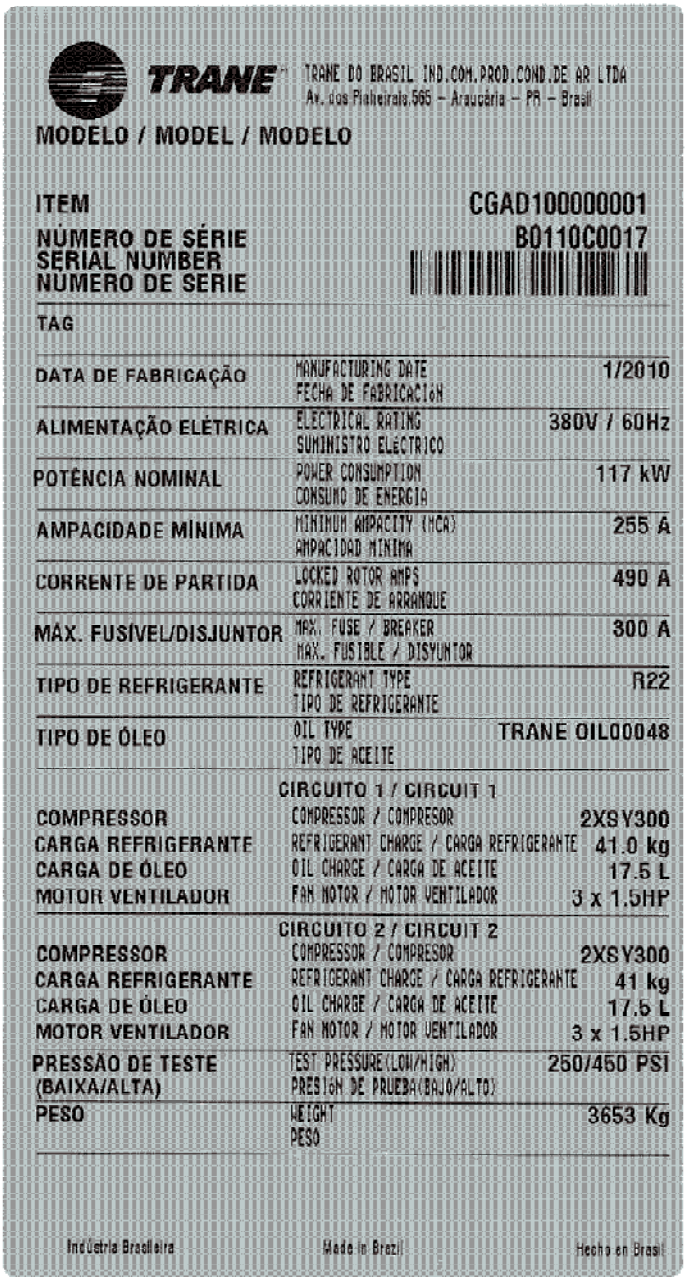

TRANE

TRANE DO BRASIL IND.COM.PROD.COND.DE AR LTDA
Av. dos Pinheirais,565 – Araucária – PR – Brasil

MODELO / MODEL / MODELO

ITEM		CGAD100000001
NÚMERO DE SÉRIE SERIAL NUMBER NÚMERO DE SERIE		B0110C0017
TAG		
DATA DE FABRICAÇÃO	MANUFACTURING DATE FECHA DE FABRICACIÓN	1/2010
ALIMENTAÇÃO ELÉTRICA	ELECTRICAL RATING SUMINISTRO ELECTRICO	380V / 60Hz
POTÊNCIA NOMINAL	POWER CONSUMPTION CONSUMO DE ENERGIA	117 kW
AMPACIDADE MÍNIMA	MINIMUM AMPACITY (MCA) AMPACIDAD MÍNIMA	255 A
CORRENTE DE PARTIDA	LOCKED ROTOR AMPS CORRIENTE DE ARRANQUE	490 A
MÁX. FUSÍVEL/DISJUNTOR	MAX. FUSE / BREAKER MAX. FUSIBLE / DISYUNTOR	300 A
TIPO DE REFRIGERANTE	REFRIGERANT TYPE TIPO DE REFRIGERANTE	R22
TIPO DE ÓLEO	OIL TYPE TIPO DE ACEITE	TRANE OIL00048
	CIRCUITO 1 / CIRCUIT 1	
COMPRESSOR	COMPRESSOR / COMPRESOR	2XSY300
CARGA REFRIGERANTE	REFRIGERANT CHARGE / CARGA REFRIGERANTE	41.0 kg
CARGA DE ÓLEO	OIL CHARGE / CARGA DE ACEITE	17.5 L
MOTOR VENTILADOR	FAN MOTOR / MOTOR VENTILADOR	3 x 1.5HP
	CIRCUITO 2 / CIRCUIT 2	
COMPRESSOR	COMPRESSOR / COMPRESOR	2XSY300
CARGA REFRIGERANTE	REFRIGERANT CHARGE / CARGA REFRIGERANTE	41 kg
CARGA DE ÓLEO	OIL CHARGE / CARGA DE ACEITE	17.5 L
MOTOR VENTILADOR	FAN MOTOR / MOTOR VENTILADOR	3 x 1.5HP
PRESSÃO DE TESTE (BAIXA/ALTA)	TEST PRESSURE(LOW/HIGH) PRESIÓN DE PRUEBA(BAJO/ALTO)	250/450 PSI
PESO	WEIGHT PESO	3653 Kg

Indústria Brasileira Made in Brazil Hecho en Brasil

Transportation and Movement

Dispatch and Handling

1. The CGAD Cooling units leave the plant ready to be installed, tested as needed, and with the correct level of oil and refrigerant for operation.
2. When the unit arrives, compare all the data on the plate with the information on the order and invoice.
3. In order to receive the unit, run a visual check on all the components, tubing, and connections in order to make sure that there are no dents or leaks caused by handling during transportation. If there are any problems, notify the transportation company and Trane do Brasil immediately.
4. The CGAD Cooling units come with hoisting supports along both sides of the unit's profile made up of four holes. Put the hoisting cables through the holes and set extension bars between the cables on the top part of the unit (fig. 2). This way, when the equipment is hoisted correctly, it will remain in its center of gravity. The loading weights are shown on table 2.
5. The chains, ropes, or steel cables should not touch the equipment.
6. During transportation, do not tip or lean the equipment more than 15° from the vertical position.
7. The compressors are fixed to their support tracks with the bolts from the rubber pads themselves and they leave the plant tight for protection against movements that could cause the tubing to break. The operation and loading position in this type of pad is the same.

Support and Fastening Base

1. In order to fix the CGAD unit in place, there must be a support base that is perfectly level and smooth. Also make sure that the location for the unit is sufficiently resistant to withstand its weight and absorb the vibrations of the unit.
2. We recommend using skids or vibration arrestors under the unit's support feet. The rubber pad-type vibration arrestors should be installed between the unit's feet and the base surface. If the equipment is installed on top of cement slab or roof, spring-type vibration arrestors should be purchased. We do not recommend the use of shock absorbers of springs vibration.
3. Mark the support points on the flooring and be careful when moving the unit horizontally and vertically.

Fig. 02 - Fastening the compressor

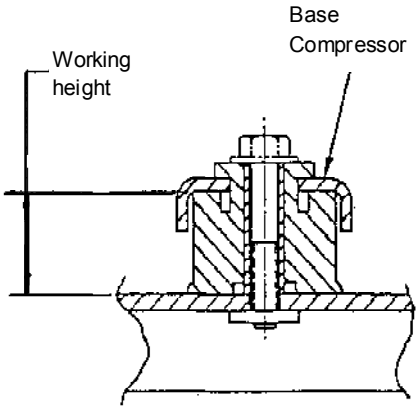

Model	Dimension "A"
020	57"
025-030	71"
040-090	78,8'

Fig. 03 - Transportation and movement instruction

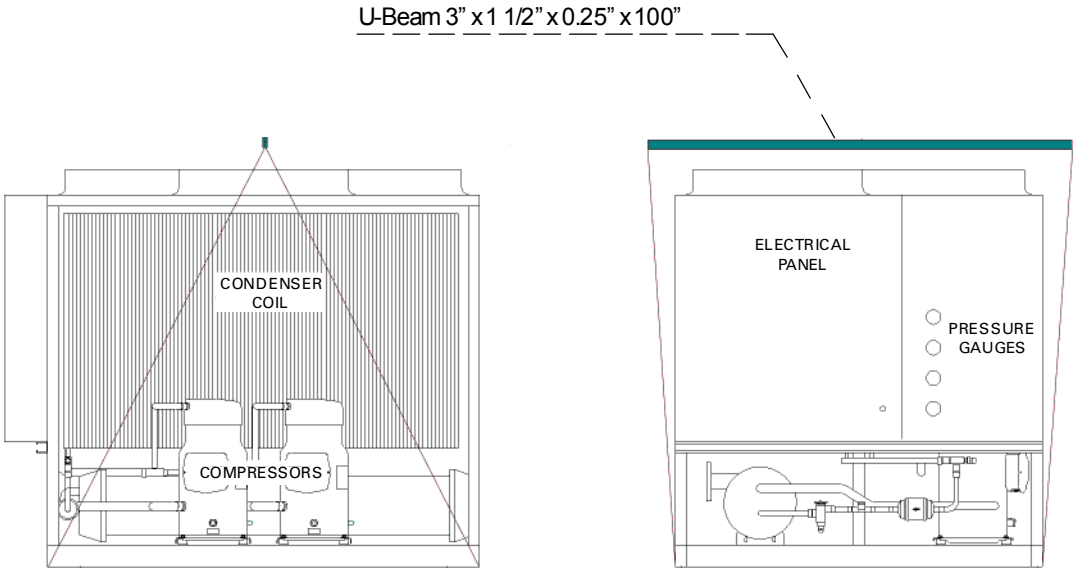

Clearances for Maintenance and Air Circulation

For the equipment's good operation, it is very important to leave enough room between the units and between the units and the walls in order to allow a good air circulation without the danger of hot air returning to the equipment (air short-circuit). Also read the section called "Application Considerations" in this manual.

Fig. 04 - Maintenance and Air Circulation Clearances

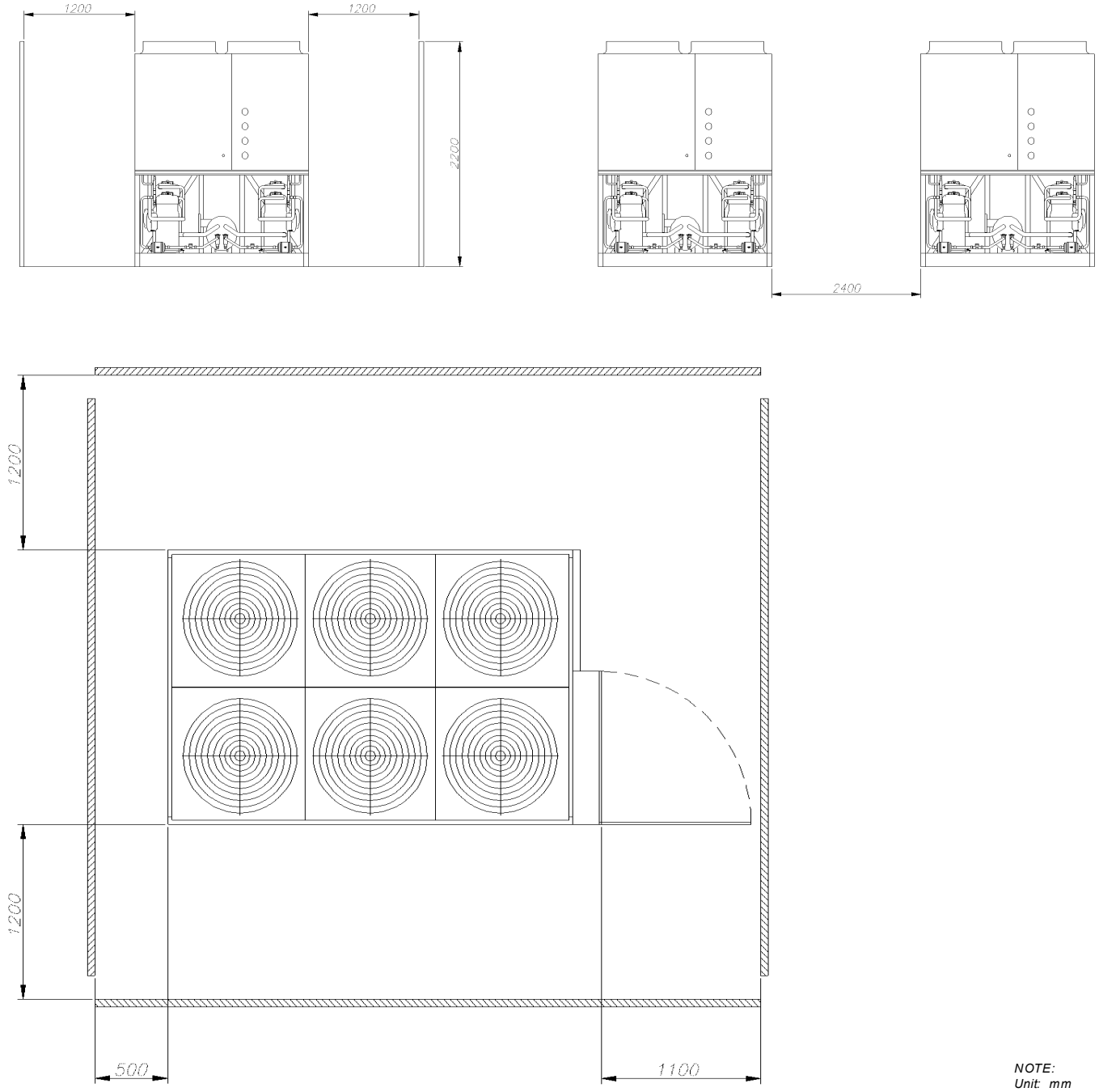

NOTE:
Unit: mm

Clearance between Units and Sound Pressure (dBA)

Make sure that there is enough space around the unit externally in order to allow the installation and maintenance team to have unrestricted access to all service points. Check the unit's dimensions in the drawings that were approved. We recommend a minimum of 4 feet (1.2 m) for servicing the compressor. Make sure there is enough space to open the control panel doors. Check the minimum spaces needed on figure 35 and figure 37. Above all, any local codes that determine additional spaces needed have priority over these recommendations.

The warm air recirculation and the depletion of the coil cause a reduction in the unit's efficiency and capacity due to an increase in the charge pressures. Do not allow residues, trash, and other materials to accumulate around the unit. The movement of air supply can cause residues to be sucked up into the condenser coil and block the spaces between the fins of the coil and cause the coil to become depleted. The units for low ambient temperatures need special attention. The coils of the condensers and the discharge of the fans should be kept free of snow and of other obstructions to allow an adequate air flow and a satisfactory operation.

In situations in which the equipment has to be installed with less space than that recommended, which frequently occurs in applications with retroactive updates and with ceiling assemblies, a restricted air flow is common.

An unobstructed air flow for the condenser is essential to maintain the chiller's operational capacity and efficiency. When deciding on the unit's position, plan carefully in order to ensure enough air flow through the condenser's heat transfer surface. Two possible harmful conditions must be avoided for the equipment to reach its optimum performance: warm air recirculation and the depletion of the coil.

Warm air recirculation occurs when the discharge air from the condenser fans is blown to the entrance of the condenser coil. The coil's depletion occurs when the free air-flow (or part of it) to the condenser is restricted.

Fig. 05a - Recommended clearances - horizontal assembly

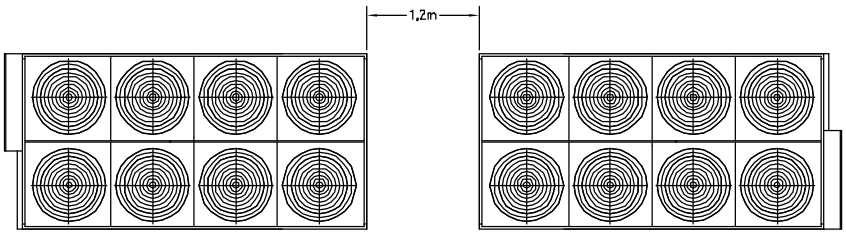

Fig. 05b - Recommended clearances - between units

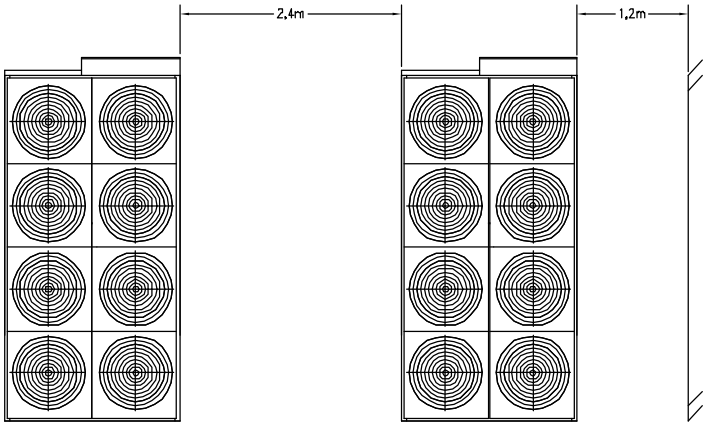

Equipamento	Pressão Sonora (dbA) a 10 metros
CGAD020C	64
CGAD025C	65
CGAD030C	65
CGAD040C	67
CGAD050C	68
CGAD060C	68
CGAD070C	70
CGAD080C	72
CGAD090C	72
CGAD100C	72
CGAD120C	74
CGAD150C	74

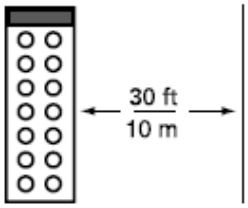

Notes: Measurements are made on the side of equipment at distance of 10 meters. Measurements smaller than 10 meters may provide diferents results because the large size of equipment and different sources of noise located in defferent positions.

Application Considerations

Application Considerations
Certain application restrictions should be taken into consideration as for the size, selection, and installation of the CGAD liquid chillers with air condensation from Trane. The reliability of the unit and system many times depends on the appropriate and complete agreement with these conditions. Applications that vary from the guidelines given must be reviewed by your local Trane engineer.

Dimensioning of the Unit
The unit's capacities are listed in the section of performance data. To intentionally overdimension a unit to ensure adequate capacity is not recommended. The excess in calculating the capacity of the system and compressor has a direct result of an overdimensioned liquid chiller. Furthermore, an overdimensioned unit is normally more expensive to purchase, install, and operate. If overdimensioning is desired, consider using two units.

Installing the Unit
Adjusting the Unit
A base or foundation is not necessary if the location selected for the unit is level and solid enough to withstand the unit's operational weight, which is listed in the table of general data (operational weight).

Insulation and Noise Emission
The most effective way to provide insulation is to put the unit far away from any sound-sensitive area. Noise transmitted structurally can be reduced by eliminating vibrations. Spring insulators have shown to be not very effective in installations with CGAD liquid chillers with air condensation and we do not recommend them.
An engineer specialized in this area should be called upon for advice with critical sound level applications.
For a maximum insulation effect, water lines and electric ducts should also be insulated. Sleeves for the passing of tubes through walls and king posts of insulated tubing with rubber can be used to reduce the noise transmitted by the water tubing. In order to reduce the noise transmitted through electric ducts, use flexible ducts. State and local laws about noise emission must always be taken into consideration. Since the environment in which a noise source is located affects the sound pressure, where the unit is placed should be carefully evaluated.

Maintenance
Adequate clearance for maintenance on the evaporator and the compressor must be provided. The minimum space recommended for maintenance may be found in the section of dimensional data and it can serve as guidelines to provide adequate clearance. The minimum space also gives enough room to open the control panel and to carry out routine maintenance.

Location of the Unit
General
An unobstructed air flow in the condenser is essential to maintain the liquid chiller's operational capacity and efficiency. When deciding where to put the unit, some careful considerations should be taken into account in order to ensure enough air flow through the condenser's heat transfer surface. Two conditions may occur that must be avoided if optimum performance is going to be reached: short circuit of hot air and scarcity of air circulation in the coil. The short circuiting of hot air occurs when the air flow from the condenser fans is blown to the entrance of the condenser's coil caused by some restriction in the place of installation.
The lack of air circulation on the coil occurs when the free air flow to the condenser coil is restricted. Both the short circuiting of hot air as well as the lack of free air flow around the coil cause reductions in the unit's efficiency and capacity due to the high discharge pressures associated with these.

Application Considerations

Providing Vertical Clearance
The vertical discharge of air from the condenser should be unobstructed. Though it is difficult to foresee the level of hot air short circuiting, a unit installed as shown above (first, to the right) would have its capacity and efficiency significantly reduced. The performance data is based on the free discharge of air.

Providing Side Clearance
The entrance of the condenser coil should not be obstructed. A unit installed closer than the minimum distance recommended for a wall or other vertical elevation can undergo a combination of lack of circulation of free air and warm air recirculation, which would result in the reduction of the unit's capacity and efficiency. The recommended side clearances are described in the section on dimensional data. These are estimates and should be reviewed with Trane's engineer assigned to the site.

Providing enough Clearance between the Equipment
The units should be separated one from the other by a distance that is enough to prevent short circuiting of hot air or lack of circulation of free air through the coil. The CGAD liquid chillers with air condensation have one of the smallest clearances recommended for equipment of its category on the market. Check with Trane's engineer assigned to your site for applications dealing with tight clearances and restricted air flows.

Installation in a Place Surrounded by Walls
When the unit is installed in a place closed in or with a small depression, the height of the fans cannot be lower than the top of the closed-in area or depression. If they are lower, the installation of duct work at the top of the unit should be considered. The installation of duct work on individual fans, however, is not recommended. These applications should always be reviewed by Trane's engineer assigned to the site.

Fig. 06 - Recommended clearances

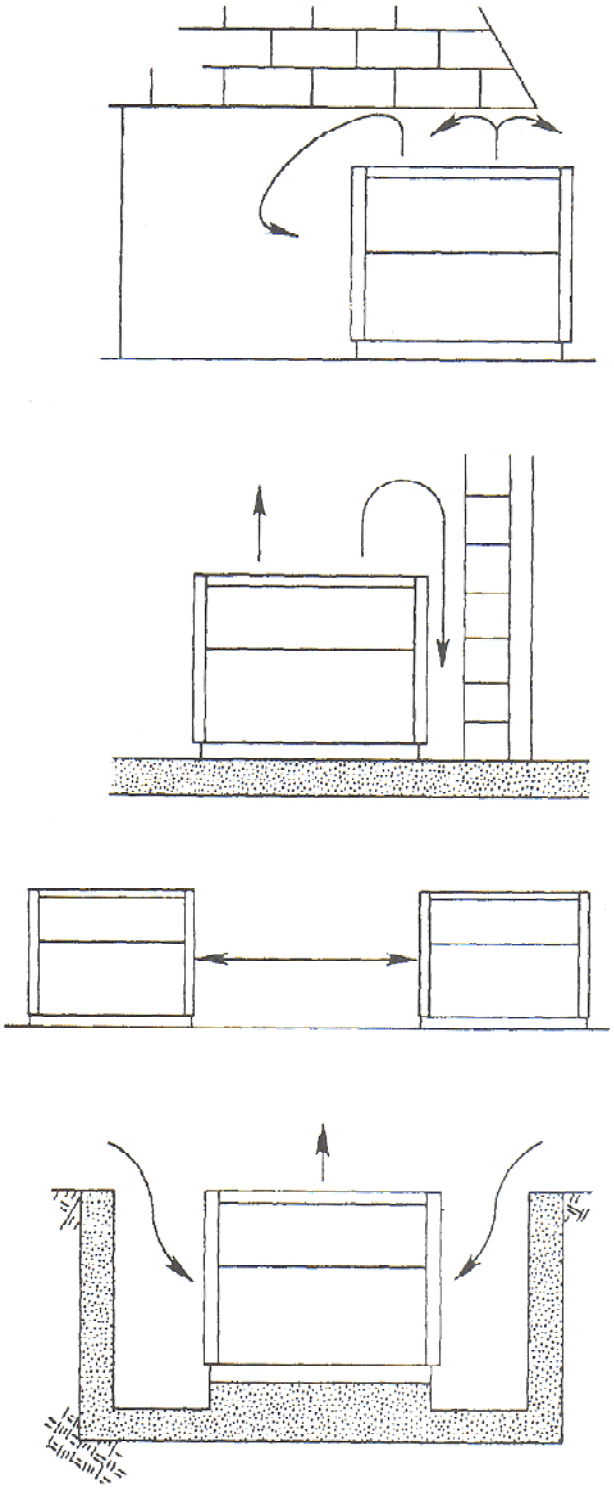

Application Considerations

Water Treatment
Dirt, pebbles, corrosive products, and other foreign matter will affect the heat transfer between the water and the components of the system. Foreign matter in the chilled water system can also cause a pressure drop and consequently reduce the flow of water. Appropriate water treatment should be determined at the location depending on the type of system and local water characteristics. It is not recommended to use salt water in the CGAD liquid chillers with air condensation. This would cause the equipment's durability to decrease considerably. Trane suggests using a water treatment specialist familiarized with the local water conditions to provide consulting services for this decision and establish an appropriate water treatment program. The capacities given in the section of performance data in this catalog are based on water with an encrustation factor of 0.00025. For capacities in other encrustation factors, check with a Trane engineer.

Effect of Altitude on the Capacity
The capacity of the CGAD liquid chillers with air condensation stated on the table of performance data is considering installation at sea level. In elevations substantially above sea level, the lower air density will lower the condenser's capacity and therefore, the capacity and efficiency of the entire unit. The adjustment factors for table 2 may be applied directly to the performance data of the catalog in order to determine the unit's adjusted performance.

Limitations of the Room
The CGAD liquid chillers with air condensation offered by Trane were designed for high durability under various room conditions. The 20 to 150 TR liquid chillers operate with temperatures between 0°C to 45°C as standard. For operation outside of these ranges, please contact Trane's local sales office. The minimum room temperatures are based on soft breezes (not exceeding 8 km/h). Higher wind speeds will result in a drop of discharge pressure and therefore increase the minimum ambient temperature of operation and start.

Water Flow Limits
The minimum water flow rates are stated on table 1 and a flow of the evaporator below the levels on the table will result in a drift causing problems of freezing, encrustation, accumulation of impurities, and temperature control problems. The water flow of the evaporator is also given in the section of general information. Flows exceeding those listed may result in excessive erosion of the tube. The evaporator can resist a reduction of up to 50% of the water flow as long as this flow is the same or greater than the minimal requirements.

Temperature Limits
Variation of Leaving Water Temperature
The CGAD liquid chillers with air condensation offered by Trane have three distinct water output categories: standard, low temperature, and ice making. The standard variation of leaving water temperature is 4 to 15°C. Machines of low temperatures produce leaving water temperatures between -18 and 4°C. Since adjustment points of the water supply temperature between -18 and 4°C result in suction temperatures equal to or lower than the water freezing point, a glycol solution is needed for all the low-temperature machines.
Ice making machines have a variation of leaving water temperature between -7 and 15°C. Ice making controls include a double adjustment point for controlling and protecting the ice making capacity and standard refrigeration. Check with Trane's engineer assigned to your site for applications or selections that have to do with low temperature or ice making machines (special order).
The maximum water temperature that can be circulated through an evaporator while the unit is on is 42°C. The evaporator becomes limited due to the thermal stress at this temperature.

Drop in Temperature of the Entering Water
The performance data for Trane's CGAD liquid chillers with air condensation are based on a drop of chilled water temperature of 5.5°C. Drops in temperature outside of this variation will result in a performance of the unit that differs from those in the catalog. For performance data outside of the variation of 5.5°C, check with a Trane engineer before making your choice. Drops in chilled water temperature from 3.3 to 10°C may be used as long as the minimum and maximum temperatures of water and minimum and maximum flow rates are not violated. Drops in temperature beyond 3.3 to 10°C are not within the optimum variation for control.
Furthermore, drops in temperature of less than 3.3°C may result in inadequate superheat of the refrigerant. Calibrated superheat is always one of the first concerns in any direct spread system and it is especially important in liquid chiller equipment where the evaporator is connected to the compressor. When the drop in temperature is less than 3.3°C, it may be necessary to bypass part of the entering water directly into the tubing of the evaporator's leaving water.

Pressure from the side of Disarmament Lower Pressure

The values of disarmament to the side of low pressure adjusted at the factory are:
– R22: 45 psig;
– R407C: 25 psig.

Application Considerations

Typical Water Piping
All the water pipes in the building should be clean before making the final connections with the liquid chiller. In order to reduce heat loss and prevent condensation, insulation should be installed. Normally expansion tanks are also needed so that changes in the chilled water volume can be accommodated.

Tab. 02 - Height Correctors Factors

Height	Capacity	Consumption	Water Flow
0	1.000	1.000	1.000
500	997	1.012	997
1000	994	1.024	994
1500	991	1.037	991
2000	987	1.052	987
2500	983	1.067	983
3000	978	1.084	978

Tab. 03 - Recomended de Etileno Glicol %

Water Outlet Temperature		Recomended de Etileno Glicol %
°F	°C	
40	4,4	0
39	3,9	3
38	3,3	6
37	2,8	8
36	2,2	10
35	1,7	12
34	1,1	14
33	0,6	15
32	0,0	17
31	-0,6	19
30	-1,1	20
29	-1,7	21
28	-2,2	23
27	-2,8	25
26	-3,3	26

Water Circuit that is too Small
The appropriate localization of the temperature control sensor is at the water supply (outlet). This location makes it so that the building serves as a kind of buffer and ensures a slow changeover in the return water temperature. If there is not a sufficiently large enough water volume in the system to supply an adequate buffer, the temperature control may be lost, resulting in a subdimensioning of the liquid chiller. A water circuit that is too small has the same effect of trying to control the system from the return water point forward. Minimal water volume is given by following equation

Minimal Volume = GPM x 3 filling time
GPM = Gallons per minute

As a general guideline, a tank must be added to system if the volume of water is too low. Make sure that the water volume in the evaporator's circuit is equal to or two times greater than the evaporator's flow. For a quick change in the charge profile, the volume should be increased. In order to avoid the effects of a water circuit that is too small, special attention should be given to the following items: A storage tank or a large pipe to increase the volume of water in the system and this way reduce the temperature changeover rate of the return water.

Operation of Multiple Units
Whenever two or more units are used in a chilled water circuit, Trane recommends that their operations be controlled by a single control device.

Operation in Series
Some systems require large drops in chilled water temperature (8.8 to 13.3oC). For these installations, two units are needed with their evaporators in series. The control of the units should begin with the single temperature controller in order to keep the separate thermostats from opposing each other in a single "take". It is possible to control the units from the individual controls of the units, but a single temperature controller provides a positive method for preventing the overlapping of controls, it balances the system's load more appropriately, and simplifies the lead-lag capacity for the compressor.

Parallel Operation
Some systems ask for more capacity or reserve capacity that a simple machine can offer. For these installations, two units with their evaporators in a parallel configuration are common. A single effective method of controlling two units in parallel is with a single temperature controller. Two individual temperature controls are not capable of providing a reliable control of the system and will result in an unsatisfactory operation and possible failure in the compressor.

Application Considerations

Components of the Hydraulic Tubing of the Evaporator
The figure below shows how to proceed to install the water tubing. An air escape valve is placed on the top part of the evaporator and leaving water. Provide additional air escape valves at the highest points of the tubing in order eliminate it from the chilled water system.

Drain of the Evaporator
The evaporator discharge connection should be close to an available drain in order to empty out the evaporator even during the service. Install a slide valve on the drain line.

Thermometers and Pressure Gauges
The installation of thermometers (items 5 and 12 of the figure) and pressure gauges (item 9) is essential at the inlet and outlet of chilled water. These instruments should be installed close to the unit and have the maximum scale of 1°C for thermometers and of 0.1 kg/cm² for pressure gauges.

Important: In order to avoid damaging the evaporator, do not let the water pressure exceed 150 psig.

We recommend installing a pressure gauge with a connection at the water inlet and outlet similar to item 9 in the figure in order to avoid reading errors. The installation of the pressure gauges and thermometers should be at a height to avoid parallax errors*. The thermometers should also be of glass or mercury scaling with colored fluid for contrast purposes and to make reading them easier.

- The pressure gauges should be designed with siphons.
- Install slide valves in order to isolate the pressure gauges when they are not being used.

Use joints on the tubing in order to facilitate the mounting and dismounting services.

The inlet and outlet should have slide valves in order to insolate the evaporator during the execution of services and a globe valve at the outlet to regulate the flow of water.

Flow-Switch
Check the safety interlocking, especially the flow-switch should be installed along straight and horizontal sections with the fins according to the diameter of the tubing and the distance of the curves and valves at least five times its diameter on each side.

Water Treatment
The use of untreated or poorly treated water could result in the formation of scales, erosion, corrosion, algae, and lime. We recommend that the services of a water treatment specialist be contracted in order to determine the treatment and if needed, to carry it out. Trane do Brasil does not take any responsibility for failures with equipment due to using untreated or poorly treated water.

Fig. 07 - Components of the Hydraulic Tubing of the Evaporator

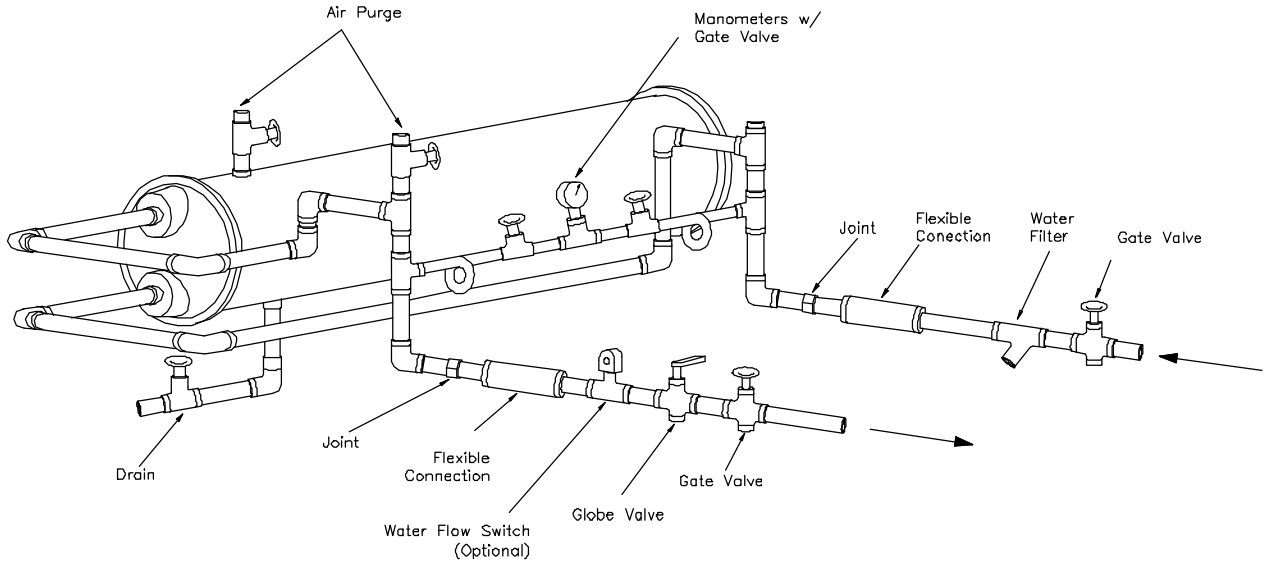

* Parallax Error: Apparent dislocation of an object when the point of observation is changed. This especially refers to the apparent dislocation of the needle of a measuring instrument when looking at it from a vertical direction (parallax error).

Checklist for Initial Start

Checklist for Initial Start
General
Once the units are installed, complete each item of this list. When they are all complete, the units will be ready for starting up.

[ ] Make sure that the installation voltage is the same as the CGAD liquid chiller and other components.

[ ] Inspect all the electric connections. They should be clean and tight.

[ ] Check the oil level in the crankcase of the compressors. The oil should be visible in the oil-level sight glass.

WARNING!

In order to prevent accidents or deaths from electric shocks, open and lock in place all the circuit breakers and electric disconnects.

CAUTION:

In order to avoid superheat, the connections and low voltage conditions in the compressor motor, make sure that all the connections are tight on the compressor's electrical circuit.

[ ] Loosen the bolts of the rubber pads on each compressor if this has not been done yet.

[ ] Open the valves of the lines of suction, liquid, and the service valve of discharge.

[ ] Make sure that there are no refrigerant leaks.

[ ] Check the voltage (energy supply) for the unit at the disconnect switch and power fuses. The voltage should be within the ranges stated on tables 10 and 11 (as well as printed on the equipment's identification plates). The voltage unbalance should not exceed 2% - check page 30 of this manual.

WARNING!

In order to avoid damaging the compressors, do not operate the unit with any of the access valves of suction, discharge, or liquid while they are closed.

[ ] Check the sequence of the phases as described in the power supply drawings.

[ ] Check the correct installation of all the temperature sensors.

[ ] Close the unit's power disconnect switch and the command circuit breakers. The switch for the CGAD liquid chiller unit should be in the OFF position.

[ ] Complete the chilled water circuit (evaporator). Read also the "Water System" of the evaporator in this manual.

[ ] Close the circuit breakers or disconnecting switches with fuses that provide energy to the starting switches of the chilled water pump.

[ ] Turn on the chilled water pump. With the water circulating, check all the tubing connections in order to detect possible leaks. Make any repairs that may be needed.

[ ] With the water pump on, adjust the water flow, and check the loss of pressure through the evaporator. Write down the levels obtained.

CAUTION:

In order to avoid damaging the equipment, don't use untreated or poorly treated water in the system. The use of inappropriate water will result in the equipment losing its warranty.

[ ] Adjust the water flow switch on the chilled water tubing and make sure that it is working correctly.

[ ] Turn off the pumps. The unit is ready to start up. Follow the instructions of operation, maintenance, and complementary procedures for starting up the unit.

Check the procedures in this manual to complete the gas charge.

Rated Voltage	Operation Range(V)
220V/60Hz	180-253
380V/60Hz	342-418
440V/60Hz	414-506
380V/50 Hz	340-440

Operational Conditions

Operational Conditions

Once the unit has been operating for approximately 10 minutes and the system is stabilized, check the operational conditions and complete the following checklist of procedures:

[ ] Check once again the flow of water and the drops of pressure through the evaporator and the condenser. These readings should be stable and at appropriate levels. If the differential pressure drops, clean all the water supply filters.

[ ] Check the suction and discharge pressures in the unit's pressure gauges.

CAUTION:

In order to minimize the use of the pressure gauges, close the valves in order to isolate them after their use.

Pressures

Take a reading of the discharge pressure at the connection of the service valve seat. The suction pressure levels at the Schrader valve on the suction line should be as follows:

Normal pressure levels

Pressures	Normal Values
Discharge	**200 to 360 psig**

[ ] Check the oil level in the compressors. At full charge, the oil level should be visible at the compressor's oil sight glass. If not, add or remove oil as needed. See table 04 for a list of the types of oil recommended and the correct amounts for the units.

[ ] Check and record the amperage consumed by the compressor. Compare the readings with the compressor's electrical information shown on its plate.

[ ] Check the liquid sight glass. The flow of refrigerant should be clean. Bubbles in the liquid indicate a low charge of refrigerant or excessive loss of pressure on the liquid line.
A restriction can frequently be identified by a notable difference in temperature between one side and another of the restricted area. Frequently ice forms at the outlet of the liquid line at this point too. Check table XX in this manual.

CAUTION:

If the suction and discharge pressures are low but the subcooling is normal, there is no lack of refrigerant gas. To add gas would result in overcharge.

[ ] Once the oil level, the amperage, and the operational pressures are stabilized, measure the superheat. Read the section on superheat and subcooling in this manual.

[ ] Measure the subcooling. Read the section on superheat and subcooling in this manual.

[ ] If the operational pressure, liquid sight glass, the superheat, and the subcooling indicate a lack of refrigerant gas, add gas to each circuit. The lack of refrigerant is indicated if the work pressures are low and the subcooling is also low.

[ ] Add refrigerant gas (only in the gas form) with the unit in operation by adding a gas charge at the Schrader valve situated on the suction line until the operational conditions have normalized.

[ ] If the operational conditions indicate an overcharge of gas, then slowly remove refrigerant through the service valve located on the liquid line. Do not discharge refrigerant into the atmosphere.

CAUTION:

In order to avoid damaging the compressors, do not allow the refrigerant liquid to get into the suction line.

CAUTION:

The system may not have the right charge of refrigerant even though the liquid sight glass is clean. Superheat, subcooling, and operational pressures must also be taken into consideration.

CAUTION:

In order to avoid damaging the compressor and ensure full cooling capacity, only use the refrigerant that is specified on the equipment's identification plate.

[ ] Fill out the "Start-up Sheet" that comes with the equipment.

WARNING!

In order to avoid injuries from freezing, do not have direct contact with the refrigerant.

Once the unit is operating normally, keep the machine house clean and the tools in place. Make sure that the doors of the control panels are in place.

New regulation Superheat of the
New regulation
The normal superheat for each circuit is 5°C to 10°C at full charge. If the superheat is not within this range, adjust the calibration of the superheat of the expansion valve. Allow 5 to 10 minutes between the adjustments to give time for the expansion valve to stabilize after each new adjustment.

Sub-cooling System
The normal sub-cooling each circuit is 6 ° C to 12 ° C at full load. If the sub-cooling isn't in this range, check the circuit overheating and adjust if necessary.

Operational Conditions

Fig.08 - Resistance of crankcase

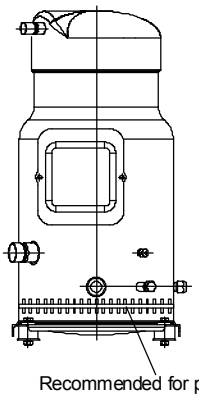

IMPORTANT

	Temperatures
Superheating	**5° C to 10°C**
Subcooling	**6° C to 12° C**

RECOMMENDATION

The oil recommended by Trane do Brasil to be used on the CGAD units is **TRANE OIL 15**.

Crankcase Resistance

Trane recommends the use of crankcase when the load of the system refrigerant load exceeds the refrigerant compressor limit (RCL). The needs of crankcase resistance are directly related to the possibility of liquid migration to the compressor, and consequently causing poor lubrication of it. Migration can occur during long periods of compressor shutdown (over 8 hours). The crankcase resistance is recommended to eliminate the liquid migration when these downtime long periods.The crankcase resistance must be installed on the compressor housing and below the removal oil point. The crankcase resistance must remain energized while the compressor is off.

Attention:

The strength of crankcase must be energized at least 12 hours before the startup of the compressor (with the service valves open) and should be maintained until the compressor energized startup.

This will prevent the dilution of oil and the bearings overload in the initial compressor starts. When the compressor is off, the crankcase temperature should be kept at least 10°C above the refrigerant temperature in the suction side (low pressure side). This requirement ensures that the refrigerant will not be retained in the compressor crankcase. Tests can be done to ensure that the appropriate temperature of the oil is maintained below the ambient conditions (temperature and wind).

Therefore, for a temperature below -5°C and an over 5m/s wind speed, it is recommended that the resistors be thermally isolated to limit the energy loss to the environment.

Table 04 - load and Refrigerant Oil

			CIRCUIT 01			CIRCUIT 02		
MODEL	REFRIG.	OLEO RECOMMENDED	COMPR.1	CARGO REFRIG.(Kg)	CARGO OLEO (L)	COMPR.2	CARGO REFRIG.(Kg)	CARGO OLEO (L)
CGAD020	R22	TRANE OIL-00015 ou DANFOSS 160P	2xSM125	18,5	7,6			
CGAD020	R407C	TRANE OIL-00048 ou DANFOSS 160SZ	2xSZ125	18,5	7,6			
CGAD025	R22	TRANE OIL-00015 ou DANFOSS 160P	SM125/SM185	22,0	10,0			
CGAD025	R407C	TRANE OIL-00048 ou DANFOSS 160SZ	SZ125/SZ185	22,0	10,0			
CGAD030	R22	TRANE OIL-00015 ou DANFOSS 160P	2xSM185	24,0	12,4			
CGAD030	R407C	TRANE OIL-00048 ou DANFOSS 160SZ	2xSZ185	24,0	12,4			
CGAD040	R22	TRANE OIL-00015 ou DANFOSS 160P	2xSM125	18,0	7,6	2xSM125	18,0	7,6
CGAD040	R407C	TRANE OIL-00048 ou DANFOSS 160SZ	2xSZ125	18,0	7,6	2xSZ125	18,0	7,6
CGAD050	R22	TRANE OIL-00015 ou DANFOSS 160P	SM125/SM185	22,5	10,0	SM125/SM185	22,5	10,0
CGAD050	R407C	TRANE OIL-00048 ou DANFOSS 160SZ	SZ125/SZ185	22,5	10,0	SZ125/SZ185	22,5	10,0
CGAD060	R22	TRANE OIL-00015 ou DANFOSS 160P	2xSM185	27,0	12,4	2xSM185	27,0	12,4
CGAD060	R407C	TRANE OIL-00048 ou DANFOSS 160SZ	2xSZ185	27,0	12,4	2xSZ185	27,0	12,4
CGAD070	R22	TRANE OIL-00015 ou DANFOSS 160P	2xSM125+SM185	31,5	13,8	2xSM125+SM185	31,5	13,8
CGAD070	R407C	TRANE OIL-00048 ou DANFOSS 160SZ	2xSZ125+SZ185	31,5	13,8	2xSZ125+SZ185	31,5	13,8
CGAD080	R22	TRANE OIL-00015 ou DANFOSS 160P	2xSM185+SM125	36,0	16,2	2xSM185+SM125	36,0	16,2
CGAD080	R407C	TRANE OIL-00048 ou DANFOSS 160SZ	2xSZ185+SZ125	36,0	16,2	2xSZ185+SZ125	36,0	16,2
CGAD090	R22	TRANE OIL-00015 ou DANFOSS 160P	3xSM185	40,5	18,6	3xSM185	40,5	18,6
CGAD090	R407C	TRANE OIL-00048 ou DANFOSS 160SZ	3xSZ185	40,5	18,6	3xSZ185	40,5	18,6
CGAD100	R22/R407C	TRANE OIL-00048 ou DANFOSS 320 SZ	2 x SY300	41,0	17,5	2 x SY300	41,0	17,5
CGAD120	R22/R407C	TRANE OIL-00048 ou DANFOSS 320 SZ	3 x SY240	66,0	26,0	3 x SY240	66,0	26,0
CGAD150	R22/R407C	TRANE OIL-00048 ou DANFOSS 320 SZ	3 x SY300	66,0	26,0	3 x SY300	66,0	26,0
CGAD100	R22/R407C	COPELAND 3MAF (*)	2XZR300KCE	41,0	11,2	2XZR300KCE	41,0	11,2
CGAD100	R22/R407C	COPELAND 3MAF (*)	2XZR310KCE	41,0	11,2	2XZR310KCE	41,0	11,2
CGAD120	R22/R407C	COPELAND 3MAF (*)	3XZR250KCE	66,0	13,2	3XZR250KCE	66,0	13,2
CGAD150	R22/R407C	COPELAND 3MAF (*)	3XZR300KCE	66,0	16,8	3XZR300KCE	66,0	16,8
CGAD150	R22/R407C	COPELAND 3MAF (*)	3XZR310KCE	66,0	16,8	3XZR310KCE	66,0	16,8

Notes:

1) oil load, refers to the total filed replacement.

2) In retrofit or maintenance procedures, the ideal is that there is no mineral oil and syntheticoil mixture! The maximum percentage of mixture of mineral and syntheticoil is 5%. For example, for a retrofit operation of R22 to R407C, when the chiller will be loaded with 20 liters of syntheticoil will be tolerate in the system up to 1 liter of mineral oil. It applies the same rule in the conversion of syntheticoil for mineral oil.

Calculating Subcooling and Superheat

Superheat Adjustments
Superheat is checked and adjusted in the following way:
- In order to analyze the superheat condition, the surface of the tubing should be prepared where the temperature sensor will be connected by sanding the surface and the fastening area.
- Securely fasten the sensor of a precise electronic thermometer to the suction line close to the remote bulb of the thermostatic expansion valve on the same plane (Suction Line Temperature - SLT). Insolate the sensor with adhesive tape in order to keep out the interference of external temperatures.
- Open the valve of the low pressure manometer on the suction side of the equipment.
- Turn on the system and allow the temperature shown on the thermometer to stabilize after the equipment has been on for a while.
- Convert what is shown on the manometer into °C, using the saturation table for R-22. The difference in degrees between the thermometer marking and the saturated evaporating temperature (SEVT) is the value of superheat. If superheat is greater than 10°C or less than 6°C, continue with this step.

SUP = TLS - TEVS

- Remove the lid to the body of the expansion valve and make the needed adjustment by turning the calibration rod.
- For superheat greater than 10°C, open the expansion valve or add refrigerant.
- For superheat less than 6°C, close the expansion valve or remove refrigerant.
- After the adjustment is made, remove the sensor of the electronic thermometer and isolate once again the suction line.
- Close the valve of the manometer for low pressure.

Subcooling Adjustments
Subcooling is checked and adjusted in the following way:
- In order to analyze the subcooling condition, the surface of the tubing should be prepared where the temperature sensor will be connected by sanding the surface and the fastening area.
- Securely fasten the sensor of a precise electronic thermometer to the liquid line, 10 to 15 cm before the unit's filter dryer on the same plane (Liquid Line Temperature - LLT). Insolate the sensor with adhesive tape in order to keep out the interference of external temperatures.
- Open the valve of the high pressure manometer on the side of the compressor's discharge, if the unit has one. A more exact reading will be obtained by measuring the high pressure at the Schrader valve on the liquid line.
- Turn on the system and allow the temperature shown on the thermometer to stabilize after the equipment has been on for a while.
- Convert what is shown on the manometer into °C, using the saturation table for R-22. The difference in degrees between the saturated condensing temperature (SCDT) and the marking of the electronic thermometer is the subcooling level. If subcooling is greater than 10°C or less than 5°C, continue with this step.

SUB = TCDS - TLL

- Remove the lid of the Schrader valve on the liquid line close to the solenoid valve and install a refrigeration hose on the pressure tap that is equipped with a bellows valve. If the subcooling is greater than 10°C, evacuate refrigerant from the system until the subcooling is calibrated or open the expansion valve.
- If the subcooling is less than 5°C, charge refrigerant through the suction valve of the system's compressor until the ideal subcooling conditions is reached or close the expansion valve.
- After the adjustment is made, remove the sensor of the electronic thermometer that was previously fixed there.
- Close the valve of the manometer for high pressure.

Note:
1. When the subcooling varies 1°C, the superheat varies 3°C.
2. The thermostatic expansion valve closes by turning the knob clockwise, while counterclockwise opens it

CAUTION:

Do not operate the compressor without some quantity of refrigerant present in the circuit. The compressors could be damaged.

WARNING!

Never put flame to the refrigerant cylinder to increase its pressure. Uncontrolled heat may cause an excessive pressure and an explosion that could result in injuries, death, and the damaging of the equipment.

WARNING!

1. **In order to avoid injuries from freezing, do not have direct contact with the refrigerant.**
2. **Use Personal Safety Equipment during all procedures.**

CAUTION:

1. **Weigh the refrigerant cylinder before and after the charge.**
2. **Do not allow the refrigerant liquid to get into the suction line. Liquid in excess could damage the compressor.**

Refrigeration Cycle

Fig. 09 - Flowchart of refrigeration cycle

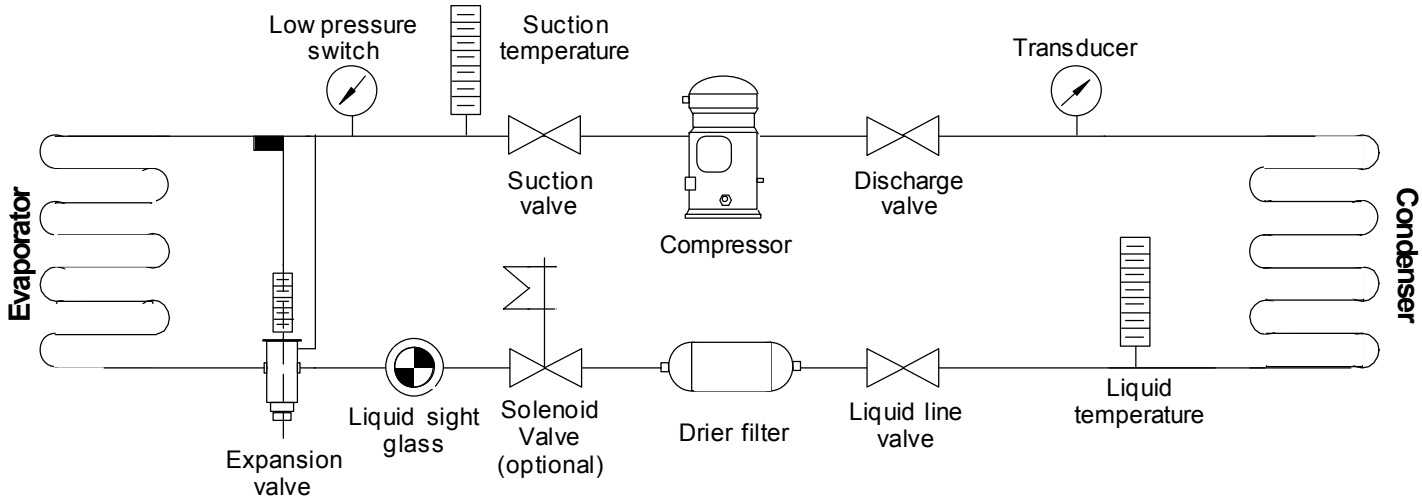

List of tools and equipment recommended in order to carry out the installation and services

Tools and Equipment Needed

- A socket wrench set from 7/16" to 11/4"
- Torque wrench with scaling up to 180 ft/lbf
- 6" and 12" crescent type wrench
- 14" pipe wrench
- Complete Allen wrench set
- Screwdriver set
- Set of pliers: universal, for cutting, lock grip, and electrical
- Set of tube flanging tools
- Ratchet-spanner for refrigeration
- A set of open-ended wrenches from 1/4" to 1 1/4"
- A set of star wrenches from 1/4" to 9/16"

Equipment required

- Pressure regulator for nitrogen
- 15 cfm vacuum pump
- Electronic vacuum gauge
- Megohmmeter of 500 volts with scaling of 0 to 1000 megohms
- Electronic leak detector
- Ammeter pliers
- Complete manifold
- Electronic thermometer
- R- 22 refrigerant and Trane Oil 15
- Oxy-acetylene soldering machine
- Temperature-pressure table of the R-22
- Equipment to recycle and recover refrigerant gas
- Anemometer
- Psychrometer
- Pulley remover
- Manual oil pump
- Phasemeter

Table for Regulating R22

Table 05 - Calibrating Superheat and Subcooling

Activity	Superheating increase	Superheating decrease	Subcooling increase	Subcooling decrease
Open the expansion valve		X		X
Close the expansion valve	X		X	
Add HCFC 22 refrigerant		X	X	
Remove HCFC 22 refrigerant	X			X

Table 06 - Pressure Table (psig) X Temperature (°C) R 22

PSIG	0	1	2	3	4	5	6	7	8	9	PSIG
30	-14	-13.4	-12.8	-12.1	-11.6	-11.1	-10.5	-10	-9.5	-8.9	**30**
40	-8.4	-7.8	-7.3	-6.8	-6.3	-5.8	-5.3	-4.9	-4.4	-3.9	**40**
50	-3.5	-3	-2.6	-2.1	-1.6	-1.2	-0.8	0.4	0	0.4	**50**
60	0.8	1.2	1.6	2	2.4	2.8	3.2	3.6	4	4.4	**60**
70	4.8	5.1	5.6	5.8	6.2	6.5	6.9	7.2	7.6	8	**70**
80	8.3	8.7	9	9.4	9.7	10.1	10.4	10.7	11	11.3	**80**
90	11.6	11.9	12.2	12.5	12.8	13.1	13.5	13.8	14.1	14.4	**90**
100	14.7	15	15.3	15.6	15.9	16.2	16.5	16.8	17	17.3	**100**
110	17.6	17.9	18.2	18.4	13.7	19	19.3	19.6	19.8	20.1	**110**
120	20.4	20.7	21	21.2	21.5	21.7	21.9	22.2	22.4	22.7	**120**
130	22.9	23.1	23.4	23.6	23.9	24.1	24.4	24.6	24.9	25.1	**130**
140	25.4	25.6	25.9	26.1	26.4	26.6	26.8	27	27.3	27.5	**140**
150	27.7	27.9	28.2	28.4	28.6	28.8	29.1	29.3	29.5	29.7	**150**
160	30	30.2	30.4	30.6	30.8	31.1	31.3	31.5	31.7	32	**160**
170	32.2	32.4	32.6	32.8	33	33.2	33.4	33.6	33.8	34	**170**
180	34.2	34.4	34.6	34.8	35	35.2	35.4	35.6	35.8	36	**180**
190	36.2	36.4	36.6	36.7	36.9	37.1	37.3	37.5	37.7	37.9	**190**
200	38.1	38.3	38.4	38.6	38.8	39	39.2	39.4	39.5	39.7	**200**
210	39.9	40.1	40.3	40.4	40.6	40.8	41	41.2	41.4	41.5	**210**
220	41.7	41.9	42.1	42.3	42.4	42.6	42.8	43	43.2	43.4	**220**
230	43.5	43.7	43.8	44	44.2	44.4	44.5	44.7	44.9	45	**230**
240	45.2	45.4	45.5	45.7	45.9	46	46.2	46.4	46.5	46.7	**240**
250	46.8	47	47.1	47.3	47.5	47.6	47.8	47.9	48.1	48.2	**250**
260	48.4	48.6	48.7	48.9	49	49.2	49.3	49.5	49.6	49.8	**260**
270	50	50.1	50.3	50.4	50.6	50.7	50.9	51	51.2	51.4	**270**
280	51.5	51.6	51.8	51.9	52.1	52.2	52.4	52.5	52.7	52.8	**280**
290	53	53.1	53.3	53.4	53.6	53.7	53.9	54.1	54.2	54.4	**290**
300	54.5	54.6	54.8	54.9	55	55.2	55.3	55.5	55.6	55.7	**300**
310	55.9	56	56.1	56.3	56.4	56.6	56.7	56.8	57	57.1	**310**
320	57.2	57.4	57.5	57.6	57.8	57.9	58	58.1	58.3	58.4	**320**
330	58.5	58.7	58.8	58.9	59.1	59.2	59.3	59.4	59.6	59.7	**330**
340	59.8	60	60.1	60.2	60.4	60.5	60.6	60.7	60.9	61	**340**
350	61.1	61.3	61.4	61.5	61.6	61.8	61.9	62	62.2	62.3	**350**
360	62.4	62.6	62.7	62.8	62.9	63	63.1	63.2	63.4	63.5	**360**
370	63.6	63.7	63.8	63.9	64	64.1	64.3	64.4	64.5	64.6	**370**
380	64.7	64.8	64.9	65	65.1	65.3	65.4	65.5	65.6	65.7	**380**
PSIG	**0**	**1**	**2**	**3**	**4**	**5**	**6**	**7**	**8**	**9**	**PSIG**

IMPORTANT:

1. **By varying the subcooling 1°C, the superheat varies 3°C.**
2. **The thermostatic expansion valve closes by turning the knob clockwise, while counterclockwise opens it.**
3. **If the equipment is requested as not having access valves (recommended), all of them leave the factory with Schrader valves installed on the lines of suction, discharge, and liquid, which will be used to make the readings of pressures and maintenance operations.**

Table for Regulating R-407c

Table 07 - Calibrating Superheat and Subcooling

Activity	Superheating		Subcooling	
	increase	decrease	increase	decrease
Open the expansion valve		x		x
Close the expansion valve	x		x	
Add R-407c refrigerant		x	x	
Remove R-407C refrigerant	x			x

Table 08 - Pressure Table (psig) X Temperature (°C) R-407c

PSIG	Sat. Liq. (ºC)	Sat Vap.	PSIG	Sat. Liq. (ºC)	Sat. Vap.
30	-17,2	-10,6	165	27,2	32,2
32	-16,1	-9,4	170	27,8	33,3
34	-15,0	-8,3	175	28,9	34,4
36	-13,9	-7,2	180	30,0	35,6
38	-12,8	-6,1	185	31,1	36,1
40	-11,7	-5,0	190	32,2	37,2
42	-10,6	-3,9	195	32,8	38,3
44	-9,4	-3,3	200	33,9	38,9
46	-8,9	-2,2	205	35,0	40,0
48	-7,8	-1,1	210	35,6	40,6
50	-6,7	-0,6	215	36,7	41,7
52	-6,1	0,6	220	37,2	42,2
54	-5,0	1,7	225	38,3	43,3
56	-4,4	2,2	230	38,9	43,9
58	-3,3	2,8	235	40,0	45,0
60	-2,8	3,9	240	40,6	45,6
62	-1,7	4,4	245	41,7	46,7
64	-1,1	5,6	250	42,2	47,2
66	0,0	6,1	255	43,3	47,8
68	0,6	6,7	260	43,9	48,9
70	1,1	7,8	265	44,4	49,4
75	3,3	9,4	270	45,6	50,0
80	5,0	11,1	275	46,1	50,6
85	6,7	12,8	280	46,7	51,7
90	7,8	13,9	285	47,8	52,2
95	9,4	15,6	290	48,3	52,8
100	11,1	17,2	295	48,9	53,3
105	12,8	18,3	300	49,4	53,9
110	13,9	20,0	310	51,1	55,6
115	15,0	21,1	320	52,2	56,7
120	16,7	22,2	330	53,9	57,8
125	17,8	23,9	340	55,0	58,9
130	18,9	25,0	350	56,1	60,6
135	20,6	26,1	360	57,2	61,7
140	21,7	27,2	370	58,9	62,8
145	22,8	28,3	380	60,0	63,9
150	23,9	29,4	390	61,1	65,0
155	25,0	30,6	400	62,2	66,1
160	26,1	31,7	425	65,0	68,3
			450	67,8	71,1

Operational Procedures

CAUTION:

All the tests done on the pressure switches should be done with reliable pressure gauges. These safety devices are calibrated at the factory and sealed. If violated, the warranty will be void.

Table 09 - Overheating and subcooling adjustmen7

Oil level	Visible when compressor is running
High pressure	200 to 340 psig
Low pressure	55 to 80 psig
Overheating	from 6 to 10°C
Subcooling	from 5 to 10°C
Liquid sight glass	Refrigerant flow without gas traces
Voltage	Must not excede +/-10% of nameplate voltage
Current	Must not be over nameplate current
Evaporation temperature	- 2,0°C to +8 C. Normal value = 5°C below chilled water leaving temperature.
Condensing temp. (Air-Cond)	38°C to 60°C . Normal value 20°C above entering air temp.

Periodic Preventive Maintenance
Carry out all the maintenance inspections and services at the recommended intervals. This will prolong the equipment's durability and will reduce the possibility of the equipment failing.

Use the "Operational Reading Datasheet" to record on a weekly basis the operational conditions for this unit. The sheet with the operational data could be a valuable diagnostic tool for the technical assistance team. By writing down trends of the operating conditions, the operator can frequently foresee and avoid problem situations before they become serious. If the unit does not operate correctly, go to "Troubleshooting".

Weekly Maintenance
Once the equipment has been operating for approximately 10 minutes and the system is stabilized, check the operational conditions and follow this checklist of procedures:

[ ] Check the oil level in the compressors. The oil level should be visible at the sight glass of the casing when the compressor is working. Operate the compressor for at least 3 or 4 hours before checking the oil level and then check it every 30 minutes. If the oil has not reached to an adequate level after this period, a qualified technician should add or remove oil. Check on Table 4 the recommended charges of refrigerant and of oil.

[ ] Check the suction and discharge pressures in the unit's pressure gauges. Read "Checking Operational Conditions"

[ ] Check the liquid line sight glass. Read "Checking Operational Conditions"

[ ] If the operational conditions and the liquid sight glass indicate a lack of gas, measure the system's superheat and subcooling. See items "Superheat of the system" and "Subcooling of the system".

[ ] If the operational conditions indicate an overcharge, then slowly (to minimize the losses of oil) remove refrigerant through the service valve located on the liquid line.

[ ] Inspect the system in order to detect

CAUTION:

To avoid accidents from freezing, don't let your skin com in contact with the refrigerant.

abnormal conditions. Use the reading datasheet as mentioned to weekly record the unit's conditions. A reading datasheet that is filled out is a valuable tool for the technical assistance team.

Monthly Maintenance
[ ] Do all the services listed for weekly maintenance.

[ ] Measure and record the system's superheat.

[ ] Measure and record the system's subcooling.

Annual Maintenance
[ ] Do all the services listed for weekly and monthly recommended maintenance.

[ ] Have a qualified technician check the calibration and operation of each control and inspect and replace any contacts or controls if needed.

[ ] If the chiller does not have a tube drain, be sure that the drain is clean for draining all the water.

[ ] Drain the system's condenser and evaporator water and tubing. Inspect all the components for leaks and damages. Clean all water filters.

[ ] Inspect the condenser tubes and clean if necessary.

[ ] Clean and repair any surface that is corroded.
[ ] Inspect the expansion valve bulb and see if it needs cleaning. Clean if necessary.

The bulb should have an excellent contact with the suction line and be appropriately insolated.

CAUTION:

All the tests done on the pressure regulators should be done with reliable pressure gauges. These safety devices are calibrated at the factory and sealed. If violated, the warranty will be void.

Operational Procedures

Refrigerant Charge
If the charge is done by suction, use only refrigerant in the form of gas. Do not put the cylinder upside down for charging the system more quickly. If the charge is done high side, then introduce the liquid directly in the system using the charging valve on the liquid line.

Procedures dor Chrageng the System

a. Open the system's disconnect.
b. Open the valves of the low and high pressure manometers.

CAUTION:

The water should always be circulating in the evaporator and in the condenser when

c. Connect the R22 cylinder to the connection of the charge valve on the liquid line. Invert the cylinder to introduce only liquid in the system.
d. Add refrigerant until the pressures become stable.
e. Close the valve of the cylinder.
f. Close the disconnect and turn on the system and begin operation. Then turn off the compressor, which will make the unit begin suction and stop to operate from the low-pressure regulator.
g. Open the valve of the cylinder and allow the entrance of liquid refrigerant into the system.
h. Close the charging valve to the cylinder after the estimated charge has entered the system.
i. Leave the system operating during 30 minutes. Check the refrigerant flow in the sight glass of the liquid line and keep an eye on the operational pressure.
j. If bubbles appear in the sight glass, add as much refrigerant as needed.

Excessive Charging - Expansion Valve
The excessive charging of the chiller results in suction head pressure, low superheat, and a possible return of liquid. This set of conditions is generally overcome by readjusting the valve's superheat. If this does not correct the condition, check the condition of the bulb of the expansion valve and replace if necessary. Only replace the expansion valve in the last case.

Insufficient Charging - Expansion Valve
An insufficient charge of the evaporator results in low suction pressure and high superheat. It can be caused by an incorrect adjustment of the superheat, a choking of the solenoid valve or dryer or bulb of the valve if it is not working, or due to lack of refrigerant.

Test the bulb in the following way:
- Stop the unit and allow it to reach ambient temperature.
- Remove the remote bulb from the suction line and put it in a recipient with chilled water.
- Start up the system.
- Remove the bulb from the recipient and warm it up in your hands. At the same time, examine the suction. If there is little or no change in the suction line temperature, the bulb is defective. Replace the diaphragm and the bulb of the valve (or the entire valve). If the bulb is working, readjust the superheat. If this does not correct the problem, remove the seat of the valve and inspect it. Replace the seat if necessary.

Adding Oil
Before adding oil, allow the system to work for three or four hours. Check the oil level at 30 minute intervals.
If the level does not return to normal (oil level visible in the sight glass), add oil.

Test
a. Reclaim the refrigerant from the system with the compressor itself, up to 10 psig.
b. Connect the piston-type oil charging pump to the compressor's oil charging valve.
c.Bleed the air from the hose with the oil itself.
d. Open the charging valve and fill with oil up to the level that shows on the sight glass.
e. Close the charging valve.

THE OIL RECOMMENDED FOR THE COMPRESSOR IS "Trane Oil 15"

Liquid Line Solenoid Valve and Filter Dryer
The following conditions indicate that there is a choking of a solenoid valve or dryer.
- Low suction pressure
- Drop in temperature through the valve or dryer filter
- Formation of ice in the valve or in the dryer in serious cases.

If these symptoms occur, repair or replace the valve. Change the filter dryer core.

Purge
- Reclaim the refrigerant from the system (with the compressor itself) up to 10 psig.
- Allow the pressures in the system to stabilize.
- Keep an eye on the discharge pressure. If the level is 0.7 kgf/cm2 (10 psig) above the pressure of the R-22 saturated vapor, the ambient temperature of the air, then the system contains non-condensable gases. Transfer the refrigerant gas to a cylinder, evacuate the system, breaking the vacuum with dry nitrogen and evacuating the system again up to 500 microns. After this, charge the system again.

Operational Procedures

Low Side Repairs
If the dryer, the solenoid valve, the expansion valve, or the tubing on the low side need repairing:

- Reclaim the refrigerant from the system.
- Allow the temperature of the components to stabilize. This keeps the humidity from condensing on the internal surfaces of the system when open.
- When a new part is being installed, do this in the shortest time possible, opening the valve of the liquid line for an instant to bleed the air. When the air has been bled, immediately close the circuit.
- Remember that this method only applies for small, short repairs. If a larger and longer repair needs to be done, such as opening the chiller or the compressor, it is best that the entire low side of the system be evacuated.

High Side Repairs
If the condenser, compressor, or tubing on the high side need repairing, remove the system's refrigerant charge. After repairs are complete, make sure there are no leaks.

Checking for Leaks
Use refrigerant as an element for detecting leaks and dry nitrogen to reach the testing pressure.
Test the high and low sides of the system for the pressures stated by the local code. If the testing pressure on the high side is equal or greater to the calibrating of the safety valve, remove the valve and install a plug in the valve's mounting.

WARNING!

Under absolutely no circumstances should oxygen or acetylene be used instead of dry nitrogen - a violent explosion could occur.

a. Connect the refrigerant cylinder to the liquid line connection valve. Increase the system's high side pressure to 0.8 - 1 kgf/cm2 (12 - 15 psig).

b. Completely close (to the cylinder) the liquid line valve and remove the refrigerant connection.

c. Increase the system's pressure to the level needed using dry nitrogen.

d. Test the system's high side for leaks and then lower the testing pressure. If leaks are seen, they must be repaired and the system tested again.

e. For the system's low side, connect the pressure with the service angle valve on the suction line.

f. Use refrigerant as the detecting element and dry nitrogen to develop the testing pressure of 7 kgf/cm^2 (100 psig). Always use a pressure regulator.

g. Test this side of the system making sure there are no leaks and then lower the testing pressure. If leaks are found, repair them and then test the low side.

SYSTEM EVACUATION

The equipment needed to do the complete evacuation is the following:
- A high-vacuum pump capable of producing a vacuum equivalent to 500 microns.
- An electronic vacuum gauge
- Dry nitrogen

a. Connect the electronic vacuum gauge to the suction pressure gauge or to the connection on the tubing at the entrance of the vacuum pump.

b. Close the access valves on the pressure gauges at the instrument panel so that they don't get damaged.

c. Connect the vacuum pump to the liquid line connection valve and to the suction valve. Open the valve that connects the pump to the system.

d. Turn on the pump and evacuate the system to 2.5 mm of mercury.

e. Break the vacuum using the Schrader valve situated between the expansion valve and the evaporator with dry nitrogen and then evacuate again to 500 microns of mercury. Make the connection before beginning the vacuum.

f. Allow the system to remain in the vacuum overnight or at least during 8 hours. If no noticeable increase occurred during this time, remove the equipment from evacuation.

g. Break the vacuum with R-22 and open the access valves on the pressure gauges at the instrument panel.

Note: Use a Double-State High Vacuum pump and Measuring Gauge that are capable of reaching the minimum of 500 microns.

adding refrigerant.

RECLAIMING REFRIGERANT FOR SERVICE

The CGAD units 020, 025, and 030 have only one circuit. The CGAD units 040, 045, and 050 have two circuits.

a. If the equipment is operating, turn the A1 switch to the OFF position and allow the compressors to reclaim the gas normally. If the equipment is off, do step B.

b. Turn off the power disconnect and adjust the RCM leaving water setpoint low enough to ensure that it calls for cooling when the equipment turns on.

WARNING!

In order to prevent accidents or injuries from electric shocks, turn off and lock in place all the electric disconnects.

c. Install a jumper on terminals 117 and 118 of the low-pressure regulator of circuit 1 (or on terminals 217 and 218 of circuit 2).

d. Turn on the power disconnect and circuit breakers DJ3, DJ4, DJ5, DJ6.

e. Turn the Chiller switch to the ON position. The lead compressor will start up after the other. Allow both circuits to operate for a period of at least 5 minutes.
Carefully observe the suction pressure of each circuit. The suction pressure of any of the circuits could drop below 10 psig during this period of time. Immediately remove the jumper or turn off the disconnect. If this occurs, there is a malfunctioning in the circuit. This problem should be detected previously. If the unit operates normally, continue on to step F.

f. Manually close the service valve of the liquid line in order to do the reclaiming.

g. Carefully observe the suction pressure manometer. When the pressure drops to 10 psig, remove the jumper from terminals 117-118 (or 217-218 in circuit 2).
It should also stop by the low-pressure limit regulator. The compressor should stop and in the sight glass of the RCM should show bPA/bPB, low pressure of refrigerant in circuit A or B. Warning: do not operate the scroll compressor in vacuum. These compressors pull internally a low vacuum if the suction side is closed or restricted. This can cause the aluminum rotor to bend, open the circuit breaker, turn off the high temperature thermostat, or burn the fuses.

h. Manually close (seat) the discharge service valve for this circuit.

i. Do the reclaiming from the other circuit. Manually close the service valve of the liquid line.

j. Carefully observe the suction pressure manometer. When the pressure drops to 10 psig, remove the jumper from low-pressure switch 117-118 (Circuit 1) or 217-218 (Circuit 2).
CAUTION: The low-pressure limit regulator should never be jumped.
The compressor should stop and in the sight glass of the RCM should show bPA/bPB, low pressure of refrigerant in circuit A or B.

k. Close (seat) the discharge service valve for this circuit.

l. Once the two circuits with the refrigerant are reclaimed, open and lock all the disconnects. Keep the circuit breakers open (OFF), which will keep an accidental operation from happening while the circuit is without gas.

Operational Procedures

CAUTION:

All the tests done on the pressure regulator should be done with reliable pressure gauges. These safety devices are calibrated at the factory and sealed. If violated, the warranty will be void.

IMPORTANT

Always install a pressure regulator at the hook-up for the testing pressure. Set the control of the regulator to 14 kgf/cm² (200 psig).

Installing a new Compressor
The compressor may present basically two types of problems:

- Mechanical
- Electrical

In both cases the compressor should be replaced; but remember that it is not enough to simply put on a new compressor. Always try to find and eliminate what caused the defect.

a. Mechanical breakdown: If the compressor does not have access valves

, transfer the refrigerant to an appropriate cylinder and run the pressure test (maximum of 200 psig to protect the low-pressure switch), make a new vacuum, charge refrigerant, and then start up again with all the readings. Correct the installation that may have damaged the equipment, freeing it up for operation, and always have a specialized company monitoring it.
- If the compressor has access valves, the refrigerant can be kept in the circuit, and the following sequence should be followed.
- Close the compressor's suction and discharge valves.
- Open the nuts on the connections of the compressor's valves and pigtails on the pressure gauges
- Turn off the compressor's electric circuit
- Remove the compressor
- Install the new or reconditioned compressor
- Install the electric circuit and the pigtails of the pressure gauges
- Evacuate the compressor
- Open the compressor valves

Motor burnout
Motor burnout implies in the formation of acids and the deposit of oxides and waste on parts of the circuit and so it is necessary to replace the refrigerant and the oil and clean the entire circuit by placing HH anti-acid dryer filters in the suction and in the liquid line. In this case, the cleaning should be carried out in the following way:
- Reclaim all the refrigerant in a cylinder and send it to be recycled by the manufacturer or do your own recycling with equipment specific for this.
- Remove the compressor.
- Remove the dryer filter.

NEVER RELEASE GAS INTO THE ENVIRONMENT.

- Install the adequate filter on the compressor's suction line and change the one on the liquid line.
- Install the new or reconditioned compressor, then evacuate and charge the system.
- Check the contactor. The contacts should be clean or changed.
- Put the conditioner to work and monitor its operation.
- Check the loss of pressure through the suction filter. If the loss of pressure exceeds that recommended by the manufacturer, the filter should be changed.
- After 48 hours of operation, the oil should be analyzed.
- Change the oil and filter every 48 hours until the oil is exempt of acidity.
- Remove the suction filter. When cleaning one of the TWIN circuits (two compressors), it is necessary to change the oil of the compressor that burned out and of its pair also.

Maintenance Procedures

Cleaning on Evaporator
The evaporator is part of a closed circuit that should not accumulate any amount of encrustations or sediments.

The speed of the accumulation of layers will increase with high temperature of condensation and by water with a high ratio of minerals. The formation of layers of sediments in the tubes of condenser water occurs due to a decrease in the flow of water, a small difference in temperature between the entering and leaving water, and the condensing temperature that is abnormally high. The condenser needs to be always free of sediments in order to keep its maximum efficiency. Even a very fine layer along the surfaces of the tube can diminish significantly the condenser's heat transfer capacity.

CAUTION:

All the tests done on the pressure regulator should be done with reliable pressure gauges. These safety devices are calibrated at the factory and sealed. If violated, the warranty will be void.

ATTENTION:

Mechanical cleaning must not be performed in the Evaporator, once the water flows through the vessel and refrigerant gas flows inside the tubing.

Chemical Cleaningn
Chemical cleaning is the most satisfactory means of removing deposits from the tubes. In this treatment, the deposits are dissolved and taken away by the circulation of a chemical solution. The condenser is made up of copper, steel, and cast iron. With this information any company that is specialized in water treatment will be able to recommend a chemical product to be used for this purpose. If it is not possible to contract a water treatment service, a chemical product supplier could be consulted. Figure 38 shows the typical installation for chemical cleaning. "Figure 38" - All the materials used in the external circulation system, quantity of cleaning material, duration of the cleaning period, and any other safety precautions needed for handling the cleaning agent should be approved by the company supplying the chemical products used to execute the service.

CAUTION:

The internal parts of the evaporator are made of steel, polypropylene, and copper. Do not use cleaning products that can damage these components.

Maintenance Procedures

Motor with Open Coil Winding

a. Open the system's disconnect.
b. Remove the hook-up wires on the compressor terminals.
c. Touch the terminals of an ohmmeter on each combination of two terminals. Not only will it show continuity, but the resistance in each set of windings should be substantially the same.

Grounded Motors and Windings

a. Turn off the system's general switch.
b. Put a hook-up wire from a megohmmeter touching a metal (ground wire).
c. Touch the other hook-up wire on each of the motor's terminals, one at a time.

CAUTION:

Never use a megohmmeter or apply voltage to the motor coil when the compressor is in vacuum. This could damage the motor's coiling. Do not apply the megohmmeter directly on the terminals of the thermistor or thermostat.

Fig. 10 - Indication for measuring ohmic resistance

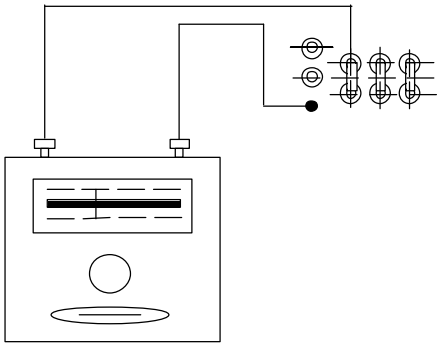

Checking the Insulation of the Motor and Protection of the Coil

a. Use a megohmmeter of at least 500 V
- Measure insulation between phases and casing
- Same between phases

b. Ohmic resistance
- Wheatstone bridge or precision Ohmmeter (1.5 V)
- Thermistors: 90-750 ohms
- Thermostats: + - 1.0 ohm

Fig. 11 - Indication of Megohmmeter Measuring

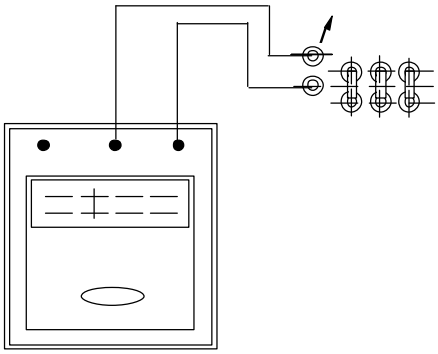

The electric measurements above should be done with the system's general switch turned off.

Never use direct voltage on the thermistor-type protector. This will destroy it immediately.

Acceptable readings considered safe to start up the compressor should not be less than 1,000 ohms per Volt of the motor's nominal voltage.
Example:

Compressor of:
- 230 volts - 230,000 ohms
- 460 volts - 460,000 ohms

In general it is best to use a megohmmeter of 500 Volts, DC to test the insulation of the compressor's motor coils. The use of megohmmeters with a voltage greater than 500 volts is not recommendable for motors with insulation less than 600 Volts because, because they could damage them.

Note: 1 megohm = 1,000,000 ohms. The markings in general should be within the range that goes from 1 megohm to infinite. If levels lower than those above are found, the compressor should be evacuated and completely dehydrated and then break the vacuum and elevate the pressure to a positive level with refrigerant. Clean the terminal plate. Then measure again. If a low insulation continues to be shown, a grounded winding is recommended.

Voltage
Check the voltage at the compressor's terminals while the system is working.

WARNING!

Because the motor acts as a capacitor when the voltage is applied, the motor terminals should be grounded to the compressor's casing during 60 seconds after the test has been done. This will lower the residual voltage in the motor that could result in a severe electric shock.

Electrical Data

Table 10 - Electrical Data - 60 Hz

		n of motors	60 Hz											
				220V				380V				440V		
Modelos	Componentes		Nominal Current (A)	Start Current(A)	MCA	Fuse	Nominal Current (A)	Start Current(A)	MCA	Fuse	Nominal Current (A)	Start Current(A)	MCA	Fuse
	Compressores		65,2				38,4				30,3			
CGAD020	Fans	2	8,2	310,0	88,0	125,0	4,7	183,0	54,0	70,0	4,2	143,0	45,0	60,0
	Total		73,4				43,1				34,5			
	Compressores		78,9				47,8				37,7			
CGAD025	Fans	3	12,3	328,0	110,0	150,0	7,1	195,0	68,0	100,0	6,3	153,0	57,0	80,0
	Total		91,2				54,8				44,0			
	Compressores		92,5				57,2				45,1			
CGAD030	Fans	3	12,3	443,0	135,0	175,0	7,1	275,0	78,0	100,0	6,3	208,0	65,0	80,0
	Total		104,8				64,2				51,4			
	Compressores		130,4				76,7				60,5			
CGAD040	Fans	4	16,4	383,0	163,0	200,0	9,4	226,0	97,0	110,0	8,4	178,0	80,0	90,0
	Total		146,8				86,1				68,9			
	Compressores		157,7				95,5				75,4			
CGAD050	Fans	6	24,6	419,0	209,0	250,0	14,1	250,0	123,0	150,0	12,6	197,0	110,0	125,0
	Total		182,3				109,6				88,0			
	Compressores		185,0				114,4				90,2			
CGAD060	Fans	6	24,6	547,0	230,0	300,0	14,1	339,0	142,0	175,0	12,6	259,0	116,0	150,0
	Total		209,6				128,5				102,8			
	Compressores		222,9				133,9				105,6			
CGAD070	Fans	6	24,6	624,0	270,0	300,0	14,1	367,0	163,0	200,0	12,6	287,0	130,0	150,0
	Total		247,5				148,0				118,2			
	Compressores		250,2				152,7				120,5			
CGAD080	Fans	8	32,8	761,0	310,0	350,0	18,8	461,0	192,0	200,0	16,8	354,0	150,0	175,0
	Total		283,0				171,5				137,3			
	Compressores		277,6				171,5				135,3			
CGAD090	Fans	8	32,8	889,0	330,0	400,0	18,8	550,0	210,0	225,0	16,8	416,0	170,0	200,0
	Total		310,4				190,3				152,1			
	Compressores		359,0				213,2				157,4			
CGAD100	Fans	6	36,3	870,0	425,0	500,0	21,0	490,0	255,0	300,0	16,5	409,0	190,0	225,0
	Total		395,3				234,2				173,9			
	Compressores		426,4				251,7				187,3			
CGAD120	Fans	8	48,4	1257,0	500,0	500,0	28,0	720,0	295,0	300,0	22,0	581,0	225,0	250,0
	Total		474,8				279,7				209,3			
	Compressores		538,6				319,7				236,7			
CGAD150	Fans	10	60,5	1545,0	630,0	700,0	35,0	863,0	376,0	400,0	27,5	730,0	284,0	300,0
	Total		599,1				354,7				264,2			

Table 11 - Electrical Data - 50 Hz

		n of motors	50 Hz			
				380V		
Modelos	Componentes		Nominal Current (A)	Start Current(A)	MCA	Fuse
	Compressores		29,7			
CGAD020	Fans	2	4,4	143,0	45,0	60,0
	Total		34,1			
	Compressores		37,8			
CGAD025	Fans	3	6,6	154,0	57,0	80,0
	Total		44,4			
	Compressores		45,9			
CGAD030	Fans	3	6,6	209,0	65,0	80,0
	Total		52,5			
	Compressores		59,3			
CGAD040	Fans	4	8,8	177,0	80,0	90,0
	Total		68,1			
	Compressores		75,6			
CGAD050	Fans	6	13,2	198,0	110,0	125,0
	Total		88,8			
	Compressores		91,9			
CGAD060	Fans	6	13,2	261,0	116,0	150,0
	Total		105,1			
	Compressores		105,3			
CGAD070	Fans	6	13,2	287,0	130,0	150,0
	Total		118,5			
	Compressores		121,5			
CGAD080	Fans	8	17,6	355,0	150,0	175,0
	Total		139,1			
	Compressores		137,8			
CGAD090	Fans	8	17,6	418,0	170,0	200,0
	Total		155,4			
	Compressores		156,7			
CGAD100	Fans	6	14,7	406,0	190,0	225,0
	Total		171,4			
	Compressores		185,3			
CGAD120	Fans	8	19,6	577,0	225,0	250,0
	Total		204,9			
	Compressores		235,0			
CGAD150	Fans	10	24,5	726,0	284,0	300,0
	Total		259,5			

NOTES:
(1)Values of operation conditions are based on ARI 590-92
(2)MCA: Minimum Circuit Ampacity

Electrical Data

Electrical Phasing of the Scroll Compressor
It is very important that the right rotation of the Scroll Compressor is established before the equipment starts up. The correct rotation of the motor needs the confirmation of the sequence of phases from the supply electrical energy. The motor is internally connected to turn clockwise with the phased energy supply in A, B, and C. In order to confirm the energy's correct sequence (ABC), use the phasemeter model 45 or similar one. See Figure 29.

Basically the voltage generated at each phase by a polyphase alternator is called the phase voltage. In a three-phase circuit, three voltage solenoids are generated, dephased by 120 electric degrees. The order in which the three voltages of the three-phase system succeed each other is called the phase sequence or rotation phase. This is determined by the direction of the rotation of an alternator. When the rotation is clockwise, the phase sequence is called "ABC"; when the direction is counterclockwise, it is "CBA".

This direction can be changed outside the alternator by swapping any one of the cables of the energy supply line. This possible need of interchanging cables makes it so that the operator needs to use the phasemeter in order to quickly determine the motor's rotation.

Correcting an Improper Phase Sequence
The correct phase sequence of the electric motor can be quickly determined and corrected before the unit starts up. Use an instrument with a quality similar to the Model 45 phasemeter and carry out the following procedure:

2.1. Put the unit's RCM switch in the OFF position.
2.2. Open the circuit's protective disconnect that supplies energy to the power terminals.
2.3.Turn on the phasemeter at the outlet of the disconnect.
2.4.Turn on the electric energy by closing the disconnect.

Fig. 12 - Phase Sequence Indicator (Phasemeter)

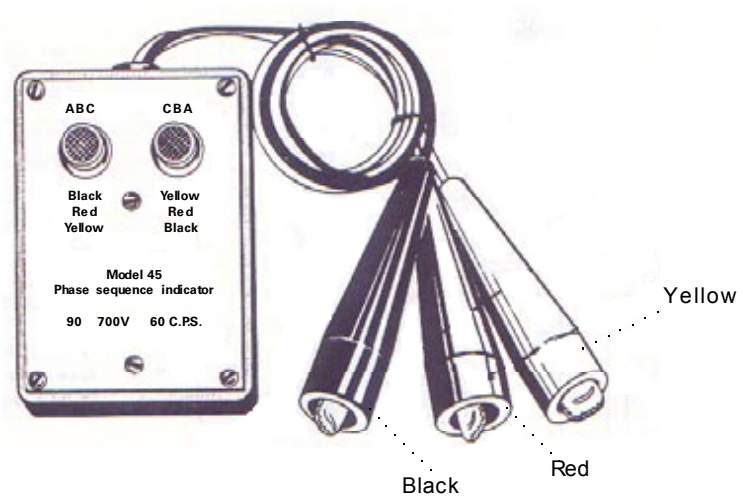

2.5 Read the phase sequence shown on the indicator. The ABC led indicates that the phase sequence is ABC.

WARNING!

To prevent accidents or death from electric shocks, be very careful when executing the service procedures when the electrical energy is on.

2.6.If the LEDs show "CBA", open the disconnect and switch two phases at the outlet, close the disconnect, and check the phasing once again.
2.7. Turn off the unit and disconnect the phasemeter.

Phasemeter cable	Phase	Terminal
Black	A	1
Red	B	2
Yellow	C	3

WARNING!

Take extra care when executing services with energized equipment since it presents risks of accidents or death.

Power Supply
The supply of electrical energy to the unit should be carefully checked so that the unit operates normally. The total voltage supplied and the unbalance between phases should be within the tolerances indicated below:

Voltage Supply
The units can come as voltages of 220 / 380 / 440V, 3P, and 50 or 60 Hz. Measure the supply voltage for all the phases of the electric disconnects. The readings should be within the voltage range of utilization shown on the unit's plate, which is the nominal voltage +/- 10%. If the voltage of some phase is not within the tolerance, communicate this to the power company so that they can correct the situation before starting up the equipment. Inadequate voltage in the unit will cause poor operation in the controls and will shorten the life of the contacts on the contactors and electric motors.

Electrical Data

WARNING!

Turn off the electrical energy and wait for rotation to cease on all the equipment before doing services, inspecting, or testing the units.

Correction

Excessive unbalance between the phases of a three-phase system will cause the motors to overheat and to breakdown. The maximum unbalance allowed is of 2%. Unbalance of voltage can be defined as 100 times the maximum deviation of the three voltages (three phases) subtracted from the arithmetic average (without taking into consideration the signal) divided by the arithmetic average.

Example:

If the three voltages measured on a line are 221 volts, 230 volts, and 227 volts, the arithmetic average would be:

(221 + 230 + 227)/3 = 226 V

The percentage of unbalance is then:

100 x (226 - 221)/226 = 2.2%

The result indicates that there is an unbalance that is greater than that permitted of 0.2%. This unbalance between phases may result in an unbalance of current of 20%, and the result would be an increase in the temperature of the motor's coiling and a lowering of the motor's durability.

Screens

DynaView Interface
DynaView has a type of compartment, which is resistant to adverse weather conditions and made of resistant plastic to be used as an independent device on the outside of the unit. DynaView has a VGA monitor with a touch screen and a backlight LED. The area of the monitor is about 102mm long and 60 mm tall (4" x 3").

Fig. 13 - Dynaview

Function Keys
With this touch screen application, the function keys are completely determined by the software and change depending on the topic presented at the moment. The functions of the touch screen are listed below:

Radio Buttons
The radio buttons show an option from the menu between two or more alternatives and all of them are visible. This is the START-UP (AUTO) button in figure 13.

The model of the radio button imitates the buttons used by the old radios to select a station. When a button is pressed, the one that had been pressed previously shows and the new station is selected. In the DynaView model, each possible selection is associated to a button.
The button selected darkens and is highlighted to indicate which option is selected. All the set of possible options is always visible along with the current option.

Increase/Decrease Buttons
The levels of the rotation are used to make it possible to change a variable reference level such as is the case with the reference level of the leaving water. The level can be made higher or lower by clicking on the increase (+) or decrease (-) signs.

Action buttons
The actions button come up on a temporary basis and offer the operator an option, such as **Enter** or **Cancel**.

Important Connections
The important connections are used to go from one screen to another.

File Tabs
The tabs on the files are used to select a screen of data. Similar to the tabs in a file folder, these are used when the option of the Hot Gas Bypass valve is solicited, the controller has an outlet to carry out the valve's operation by means of operational information established by the DynaView controller user.

Folder Tabs
The tabs on the folders are used to select a screen of data. Similar to the tabs in a file folder, these are used to put a title on the folder or screen selected and to make it possible to browse through other screens. With DynaView, the tabs are presented in a row on the top part of the screen. The file tabs are separated from the rest of the screen by a horizontal line. The tabs are separated among themselves by vertical lines. The folder selected has a horizontal line underneath the respective tab, giving the impression that it is part of the folder that is to be used (as would be the same impressions if a folder were open in a file cabinet).
The operator selects an information screen by clicking on the respective tab. The folder tabs on the top part of the screen are used to select the different types of screen.

Screens

The folder tabs on the top part of the screen are used to select the different types of screens.
Displacement arrows are added if more tabs (options) are available. When the tables are all to the left, the navigator on the left side does not show up, making it only possible to browse to the right. In the same way, when the screen all the way to the right is selected, you can then only browse to the left.

The main part of the screen is used for descriptive texts, data, levels of reference, or keys (touch area). The chiller mode (see table 1) is presented here.

The double arrows up and down are for moving up or down a page at a time. The single arrows are for going up or down a line at a time. At the end of the page, the respective displacement bar disappears.

The lower part of the screen (fixed display) is shown on all the screens and contains the following functions. The left circular zone is used to reduce the contrast/angle for visualizing the display. The right circular zone is used to increase the contrast/ angle of the display's visualization. This configuration may result on different temperatures from the last configuration.

Basic Screen Format
The screen's format is basically as follows:

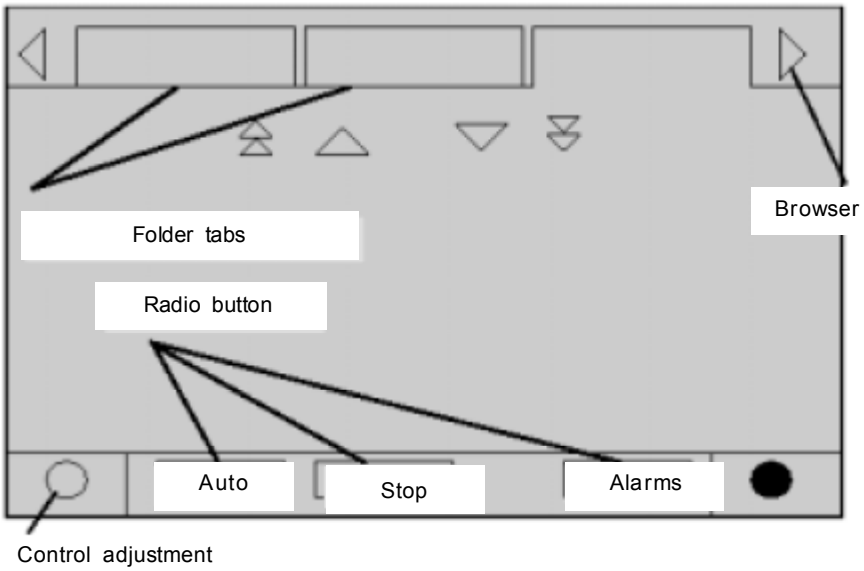

The other functions are essential for the machine's operation. The buttons AUTO and STOP are used to start-up and turn off the chiller. The key selected is shown in black (highlighted). The chiller stops when touching the STOP button after it finishes the operational mode of discharge (RUN MODE).
The AUTO button puts the chiller in active cooling if no other diagnostic exists. (An additional action is needed to erase the active diagnostic).

The AUTO and STOP buttons have priority in relation to the keys Enter and Cancel. (During a program change, the AUTO and STOP buttons are recognized even if the buttons Enter or Cancel are pushed).
The button ALARMS comes up only when there is the presence of an alarm, and then it blinks (alternating from normal to strong) in order to point out a diagnostic situation. If the ALARM button is pushed, the corresponding tab will open giving additional information.

Screens

Control Module
Trade do Brasil offers to its clients the newest technology in microprocessed control. The CH530 controller with the DynaView control module. DynaView has a touch-screen liquid crystal display, which allows the user to access any information related to the configuration, operational mode, temperatures, electric data, pressures, and diagnostics.

Safety Controls
The controller also offers a high level of protection to the equipment by constantly monitoring the variables of pressure, current, voltage, and temperatures of the evaporator and condenser. When one of these variables begins to get close to a limit condition, which could cause the unit to shut down, the controller begins a series of actions, such as staggering the compressors and fans, in order to keep the equipment in operation before resulting in the final decision to shut it down. Under normal operation, the controller will always optimize the unit's functions by staggering the compressors and fans in order to reach the best level of energy efficiency within the operating condition that the equipment currently finds itself.

External Control
The controller allows various controls to be carried out by means of external signals, giving more flexibility to the equipment's operation.

Remote On/Off - By a NC (normally closed) contact or switch, the unit will be able to be turned on and off remotely.

Interlock Water Pump - By means of an auxiliary contact of the water pump

contactor and a flow switch, the equipment will be informed about the existence of water flow in the evaporator.

Water Pump Control - The controller has an outlet to carry out the actuation of the water pump contactor of the evaporator, and an external control is not necessary for its actuation.

Control of the Hot Gas Bypass Valve - When the option of the Got Gas Bypass valve is solicited, the controller has an outlet to carry out the valve's operation by means of operational information established by the DynaView controller user.

Emergency Shutdown - A NC contact or external switch can be used to turn off the unit in emergency situations, after which a manual reactivation of the unit will be necessary using DynaView. This device allows the equipment, for example, to be turned off by a fire alarm system.

Optional Controls
Trane still offers a vast array of controls to be used for specific applications of each installation.

Remote Adjustment of Chilled Water Setpoint
By means of an analog input, the chilled water setpoint may be controlled remotely by means of a 0-10VDC or 4-20mA signal.

Signaling Relays
A set of 4 programmable relays may be used to remote signal the unit's operational status such as maximum capacity, limit operation, compressors in operation, and the signaling of alarms.

Ice Making and Control of Demand
By a NO (normally open) contact, the equipment can be turned on externally to start up the ice making mode. By a NC (normally closed) contact at another inlet of this module, the demand of the equipment can be controlled.

COMM3 Interface - This interface makes it possible for the equipment to be interlinked to Trane's control and management system-Tracer Summit.

Global Connector

The Global Connectors facilitate the connection of terminals and decrease the interference.
They have aesthetically pleasing; automotive industry grade; sealed connector system; easier connection for factory and field; repeated manual disconnection and re-connection allowed.

Figure. 14 - Conector Acoplável

Figure 15 - Female Plug wire identification (Wire color referenced to round cable)

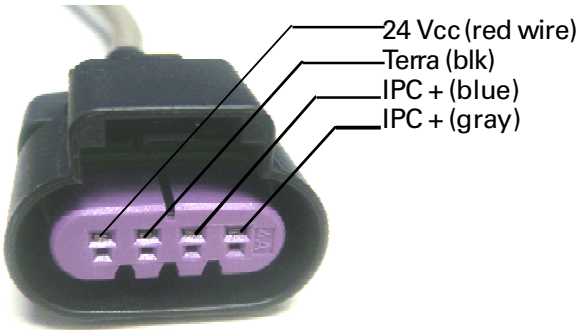

Figure 16 - Male Plug wire identification (Wire color referenced to round cable)

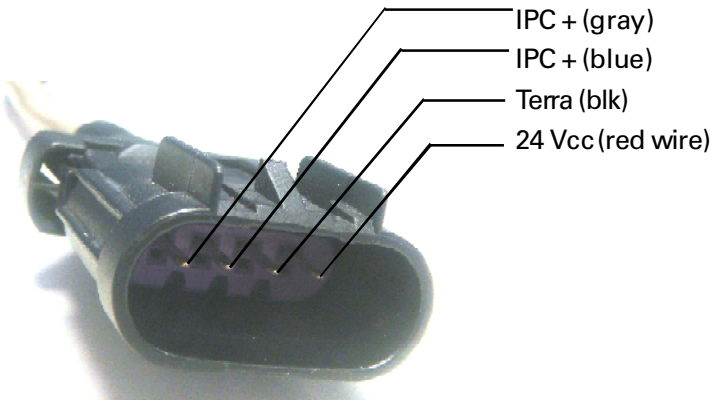

Wiring Diagram

Fig. 17 - Power and command wiring diagram CGAD 020C - Sheet 1/2

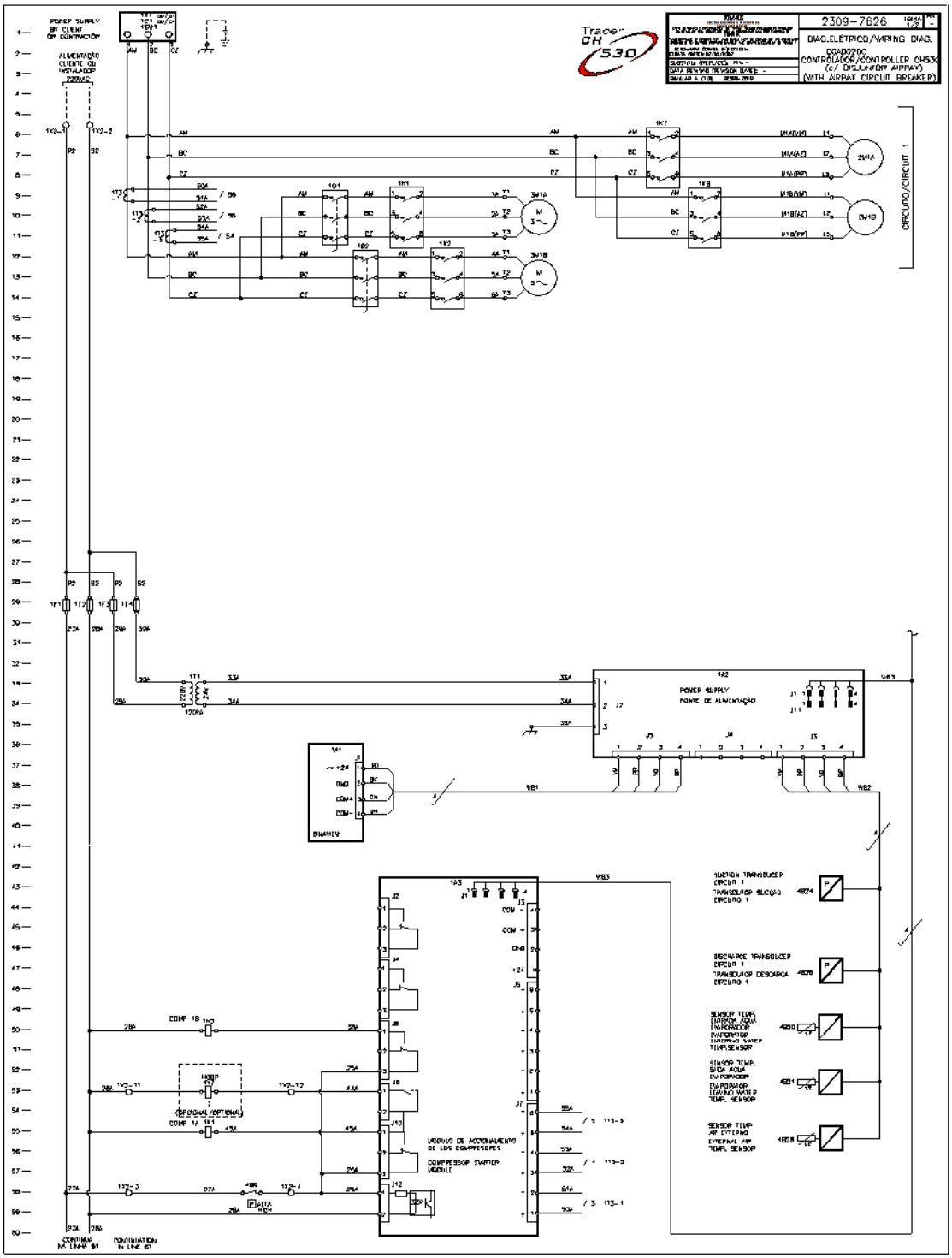

Wiring Diagram

Fig. 18 - Power and command wiring diagram CGAD 020C - Sheet 2/2 - Part I

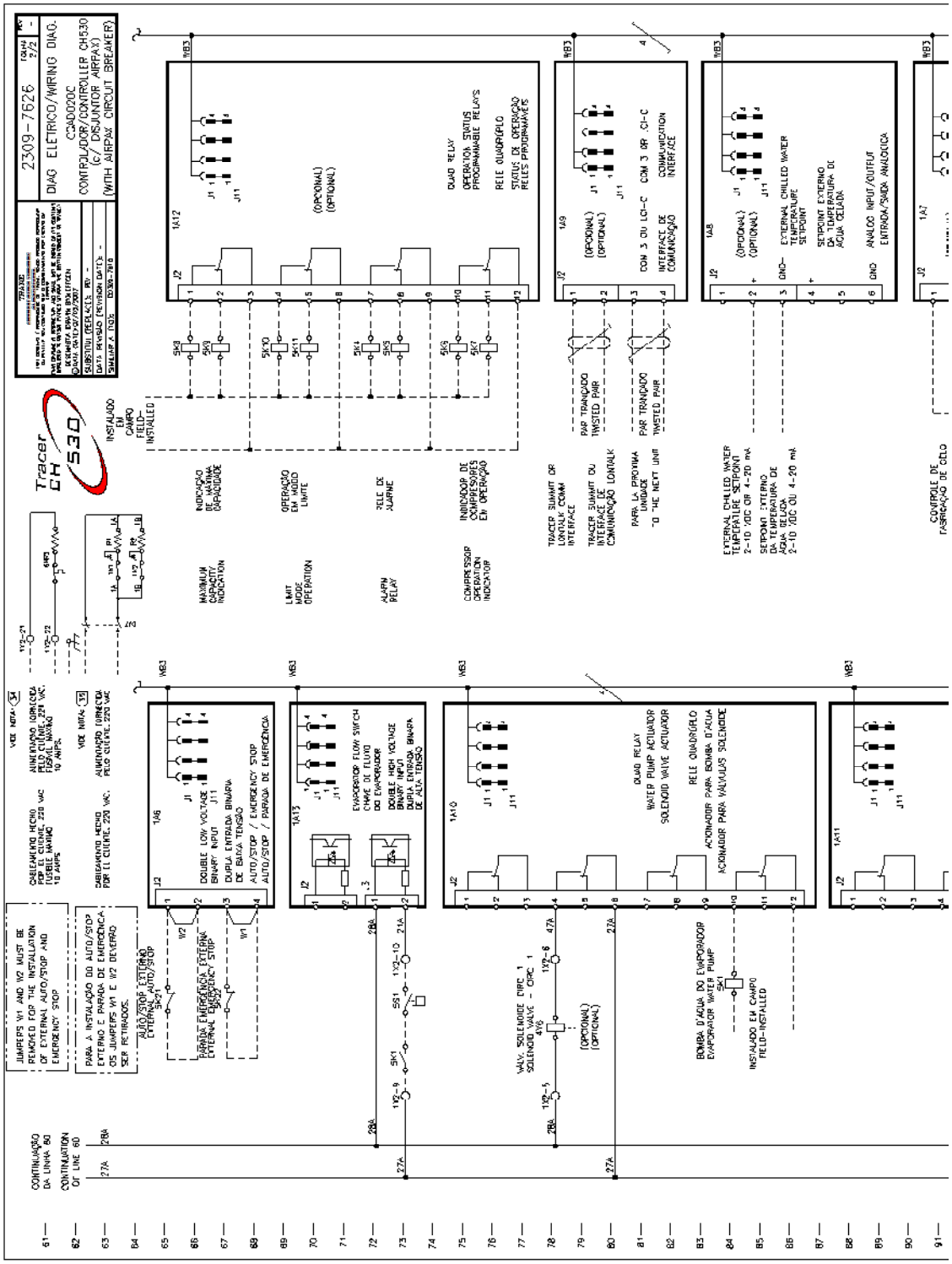

Wiring Diagram

Fig. 19 - Power and command wiring diagram CGAD 020C - Sheet 2/2 - Part II

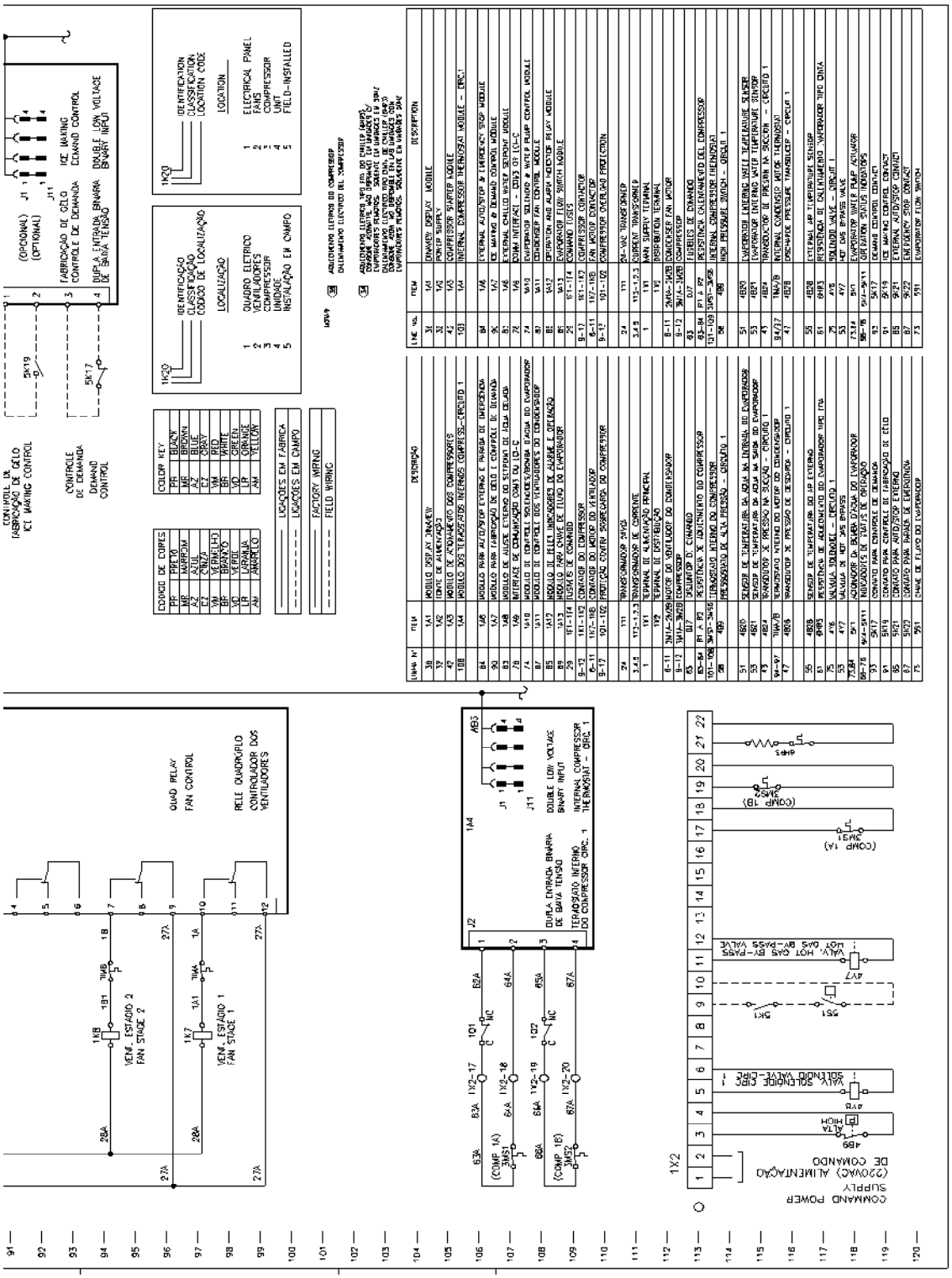

Wiring Diagram

Fig. 20 - Layout CGAD 020C

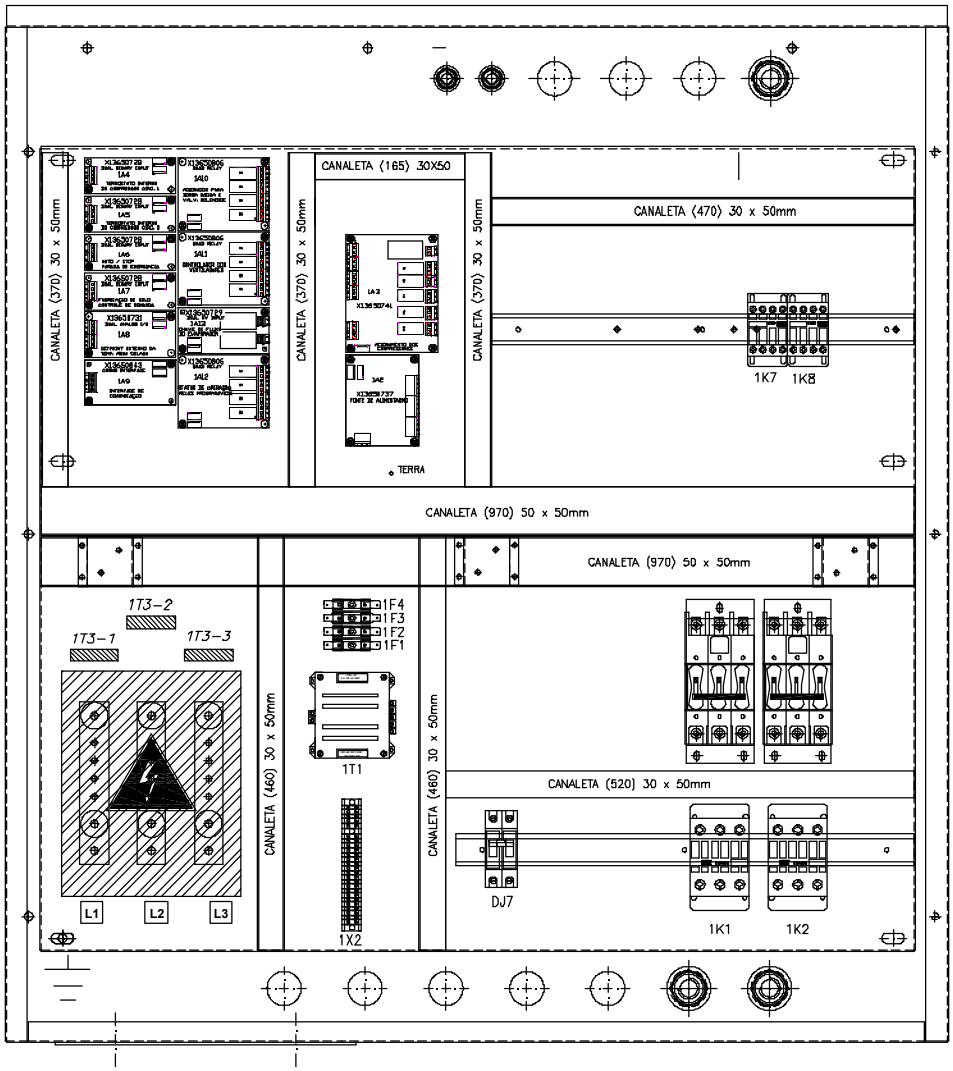

Wiring Diagram

Fig. 21 - Power and command wiring diagram CGAD025C / CGAD030C - Sheet 1/2

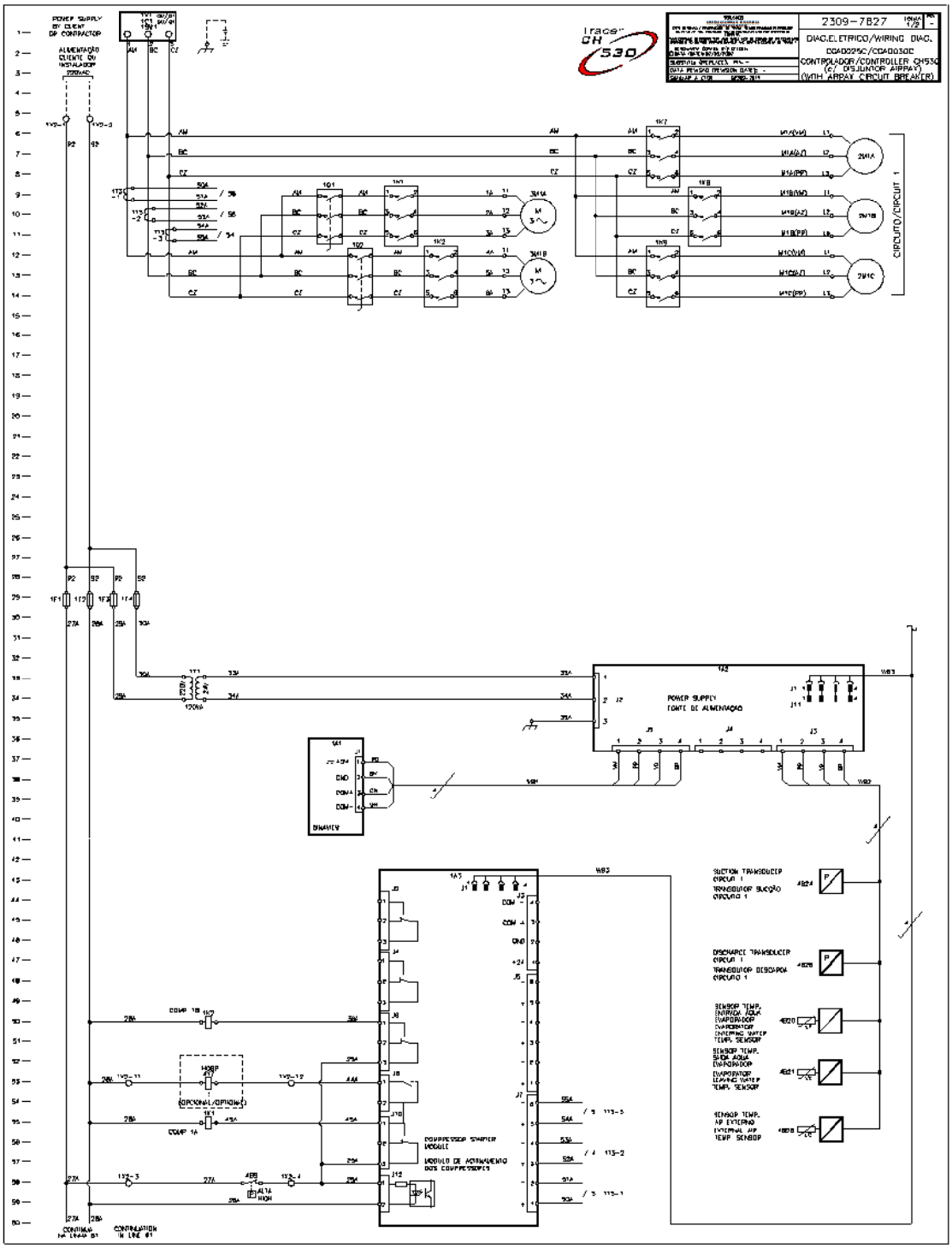

Wiring Diagram

Fig. 22 - Power and command wiring diagram CGAD 025C / CGAD030C - Sheet 2/2 - Part I

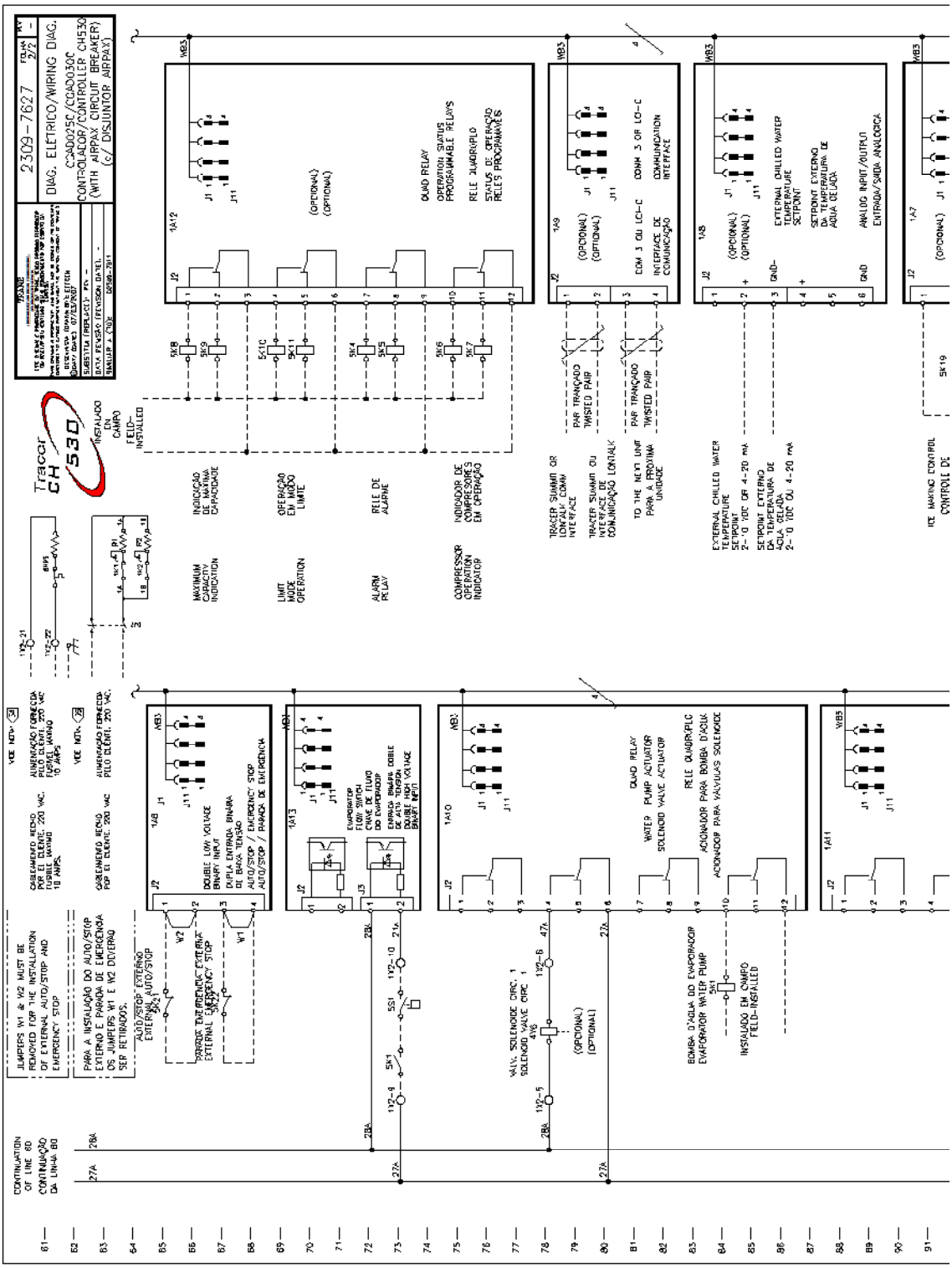

Wiring Diagram

Fig. 23 - Power and command wiring diagram CGAD 025C / CGAD030C - Sheet 2/2 - Part II

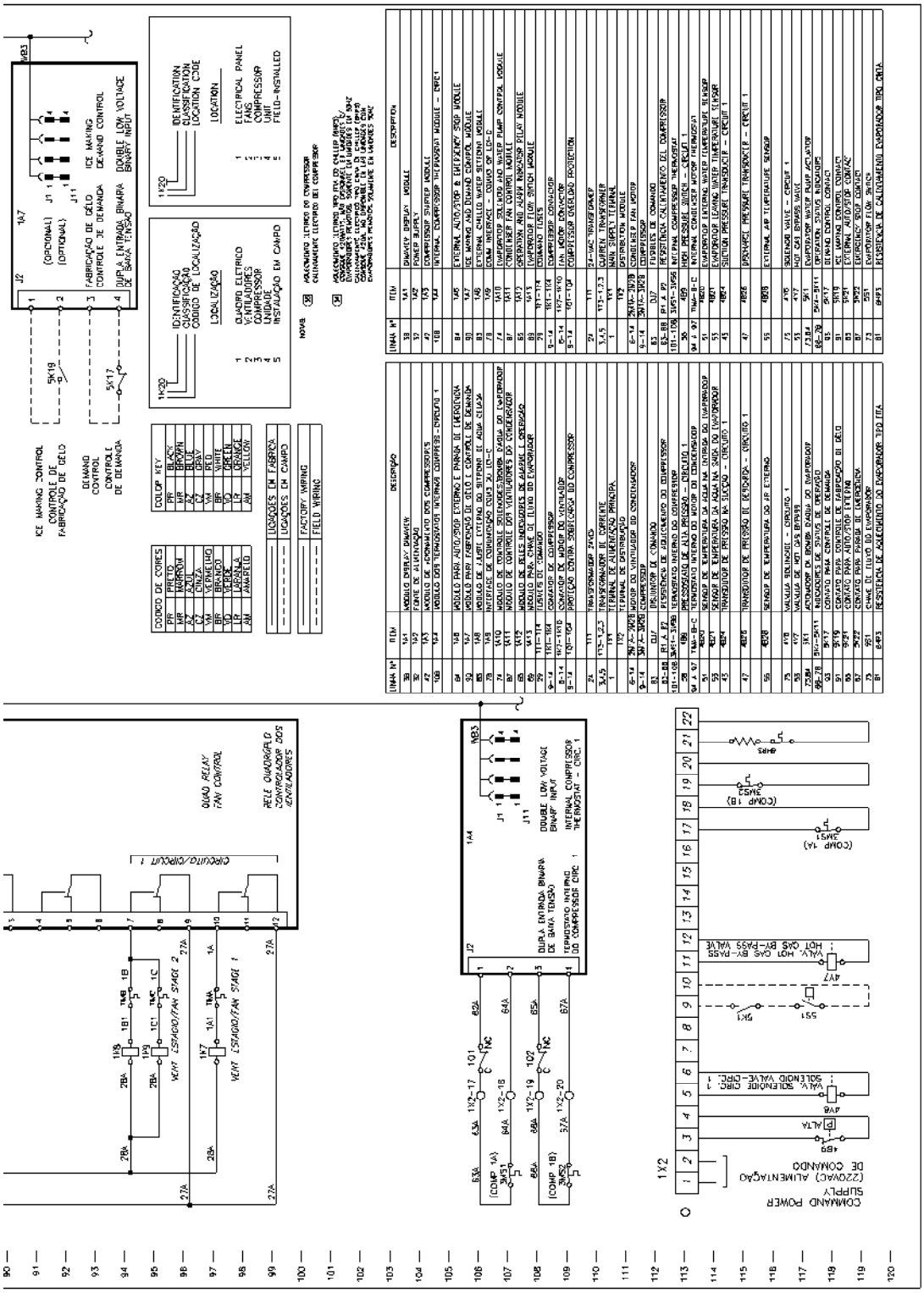

Wiring Diagram

Fig. 24 - Layout CGAD 025C / CGAD030C

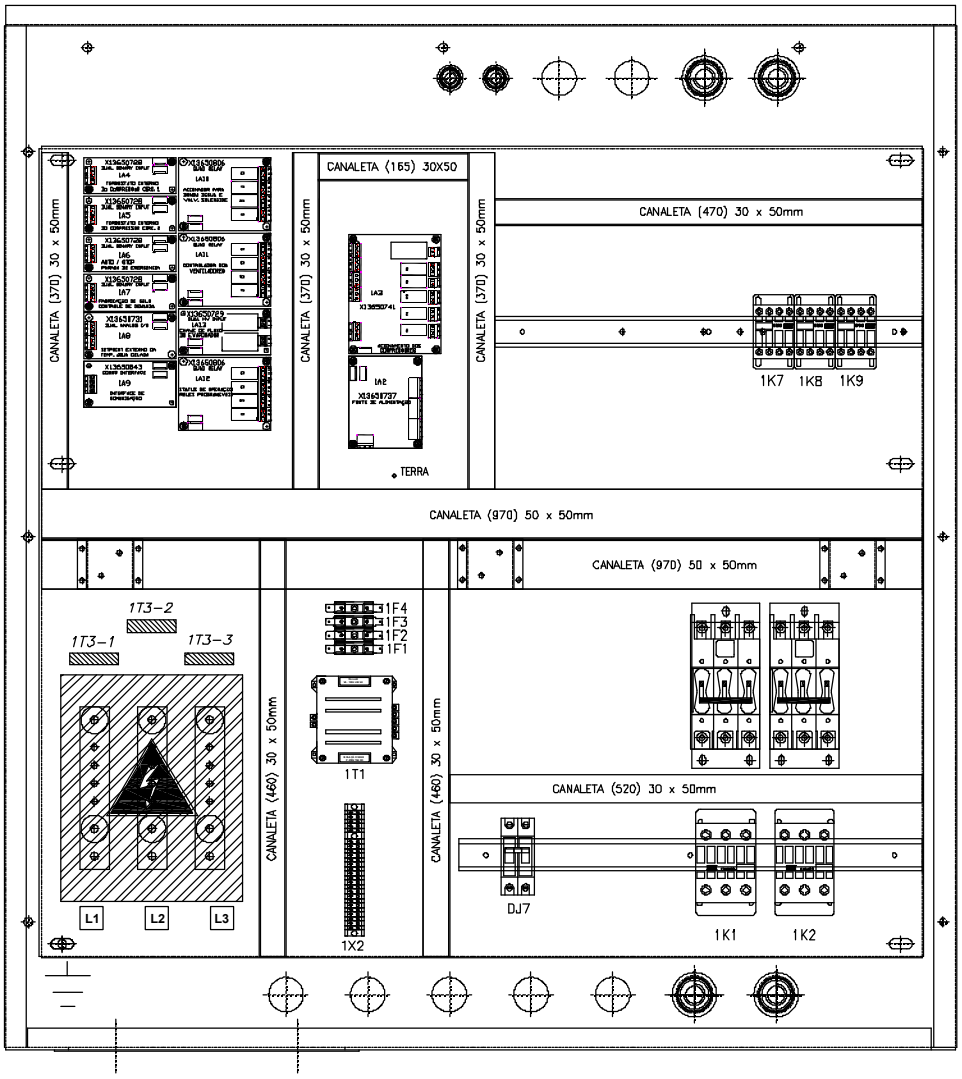

Wiring Diagram

Fig. 25 - Power and command wiring diagram CGAD040C - Sheet 1/2 - Part I

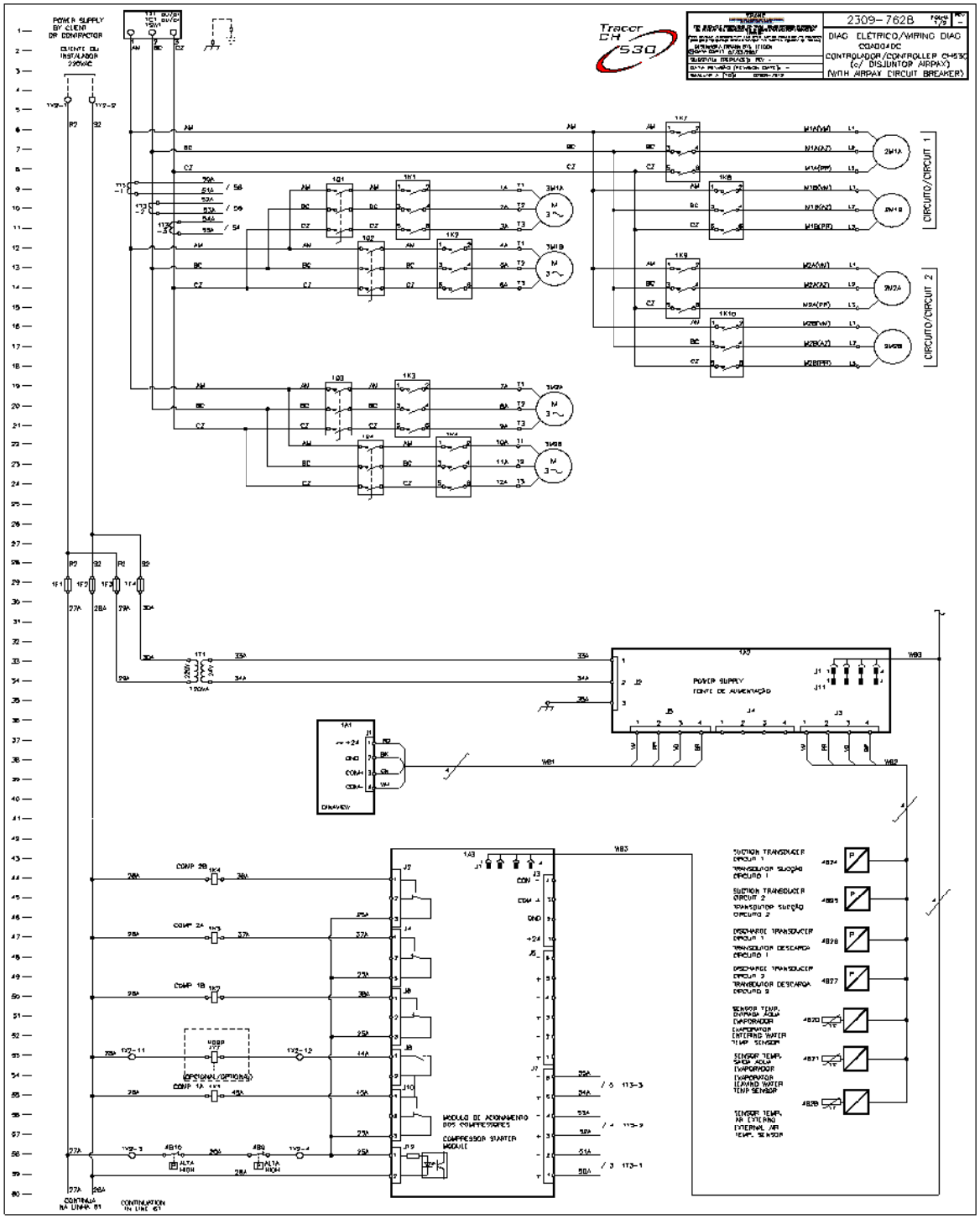

Wiring Diagram

Fig. 26 - Power and command wiring diagram CGAD040C - Sheet 2/2 - Part I

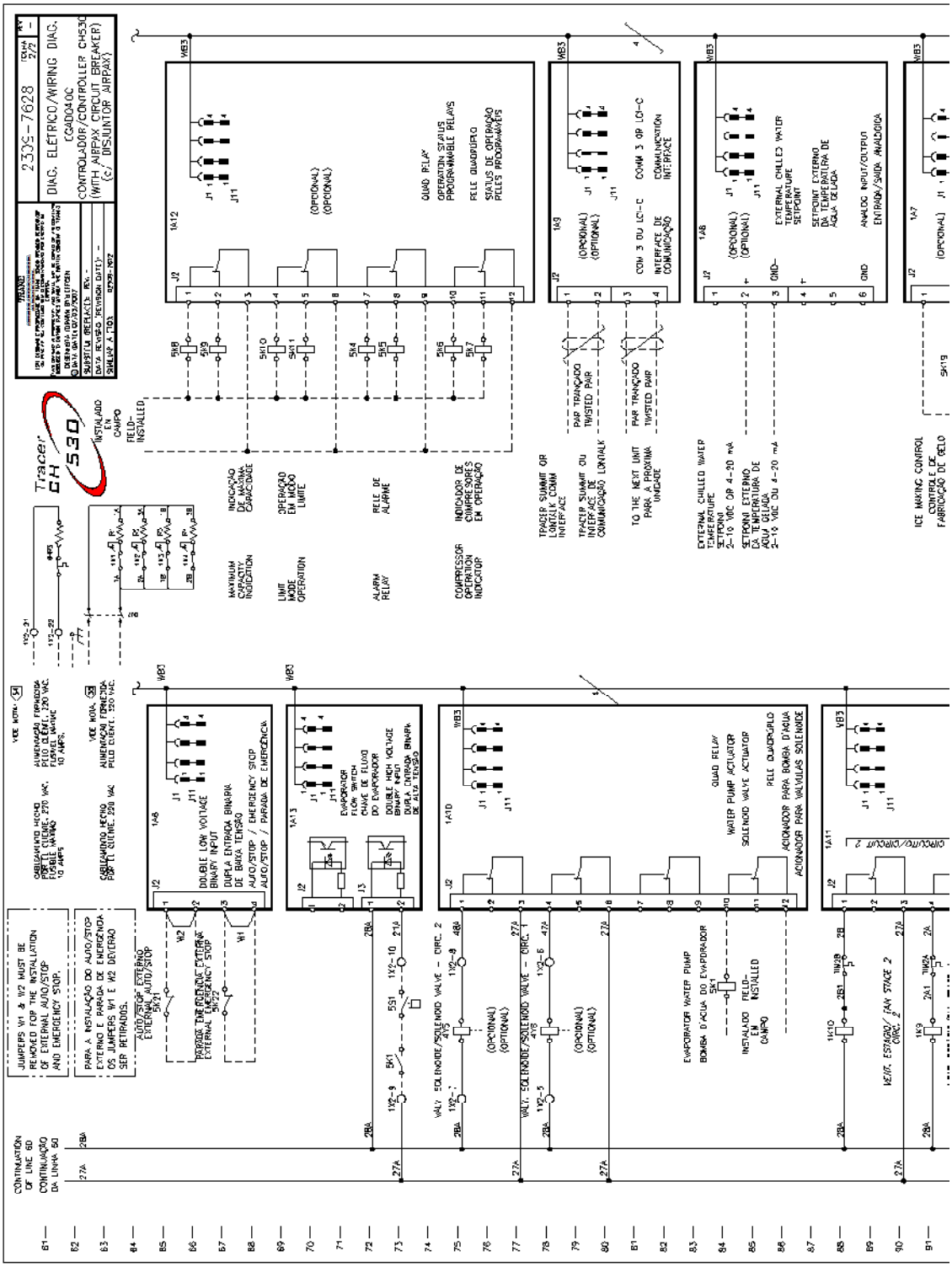

Wiring Diagram

Fig. 27 - Power and command wiring diagram CGAD040C - Sheet 2/2 - Part II

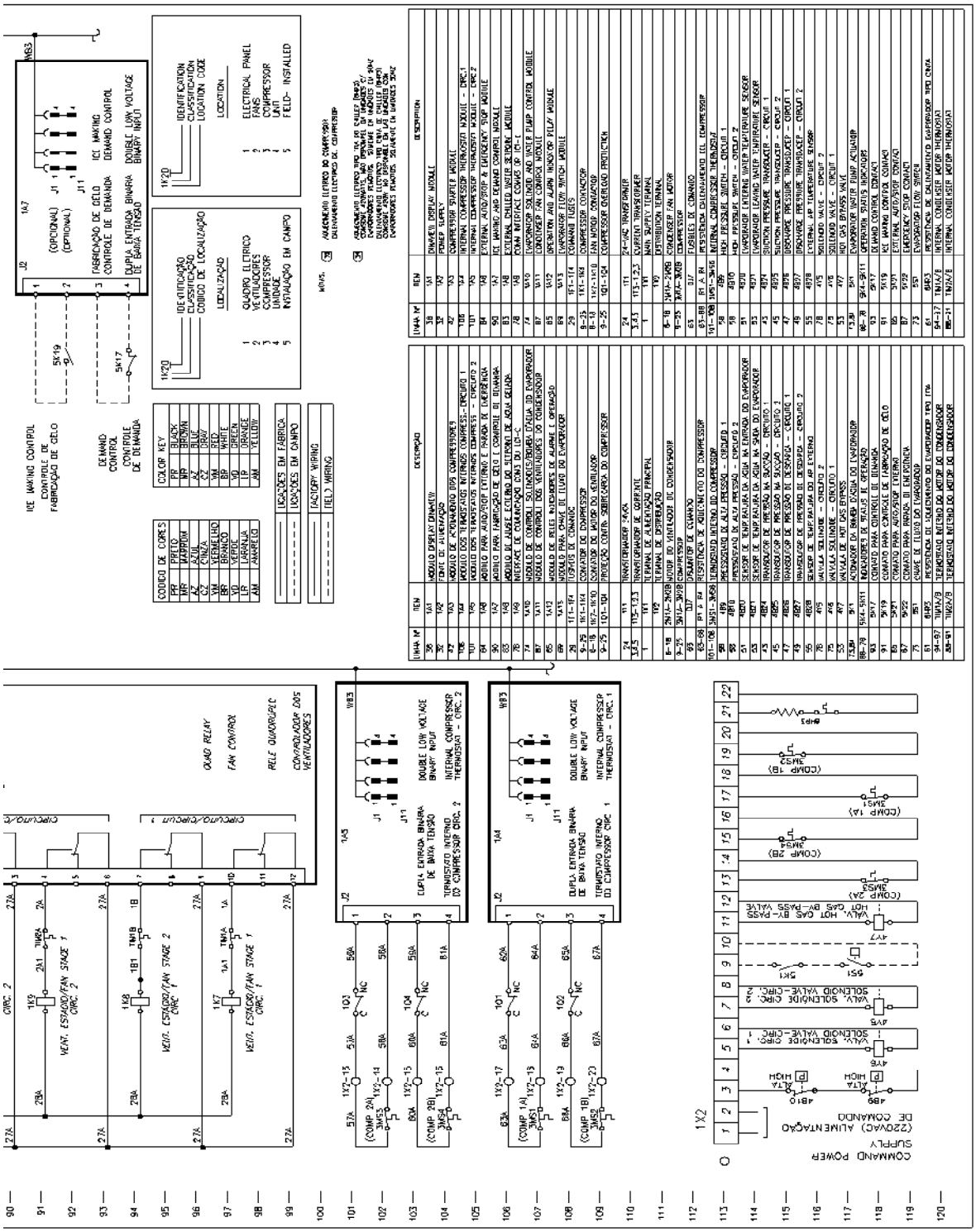

Wiring Diagram

Fig. 28 - Layout CGAD040C

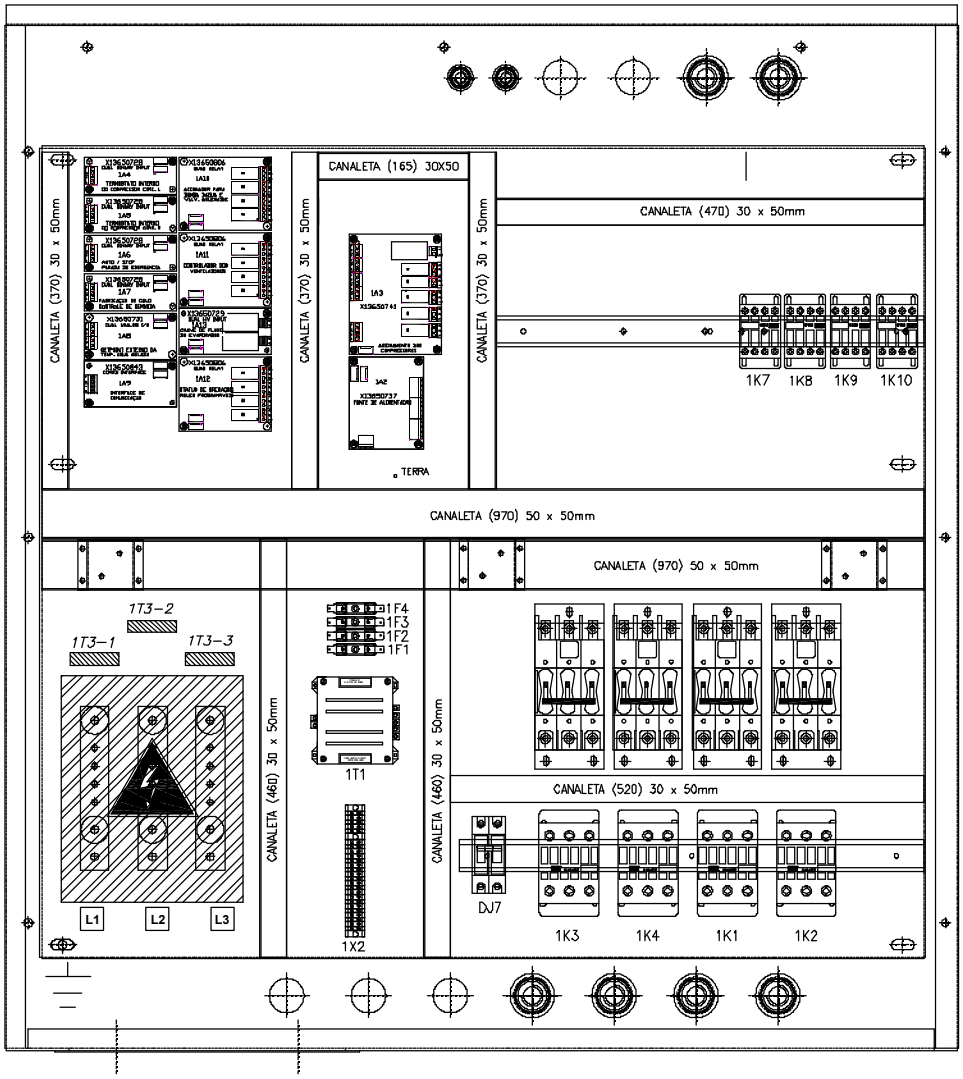

Wiring Diagram

Fig. 29 - Power and command wiring diagram CGAD 050C / CGAD060C - Sheet 1/2

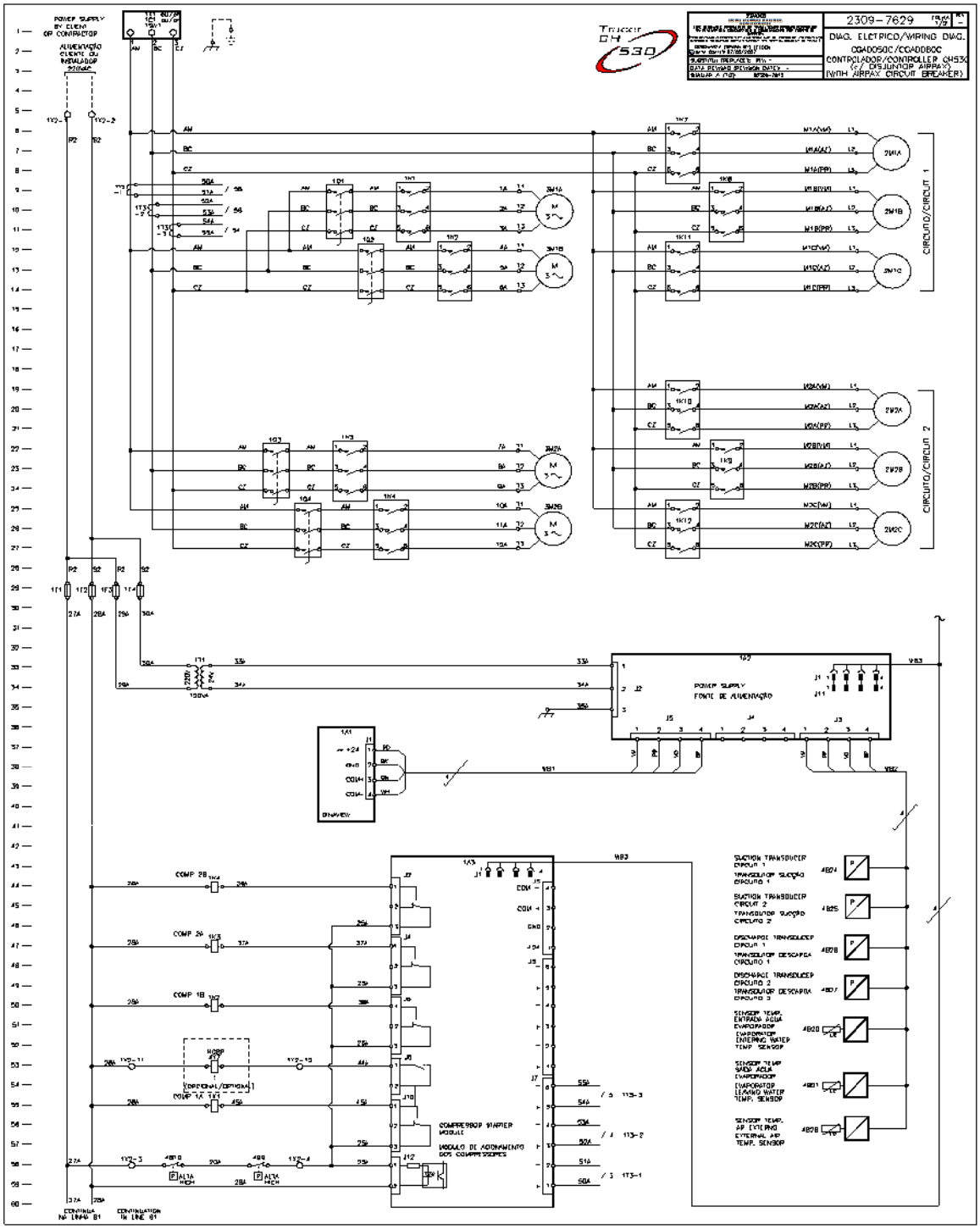

Wiring Diagram

Fig. 30 - Power and command wiring diagram CGAD 050C / CGAD060C - Sheet 2/2 - Part I

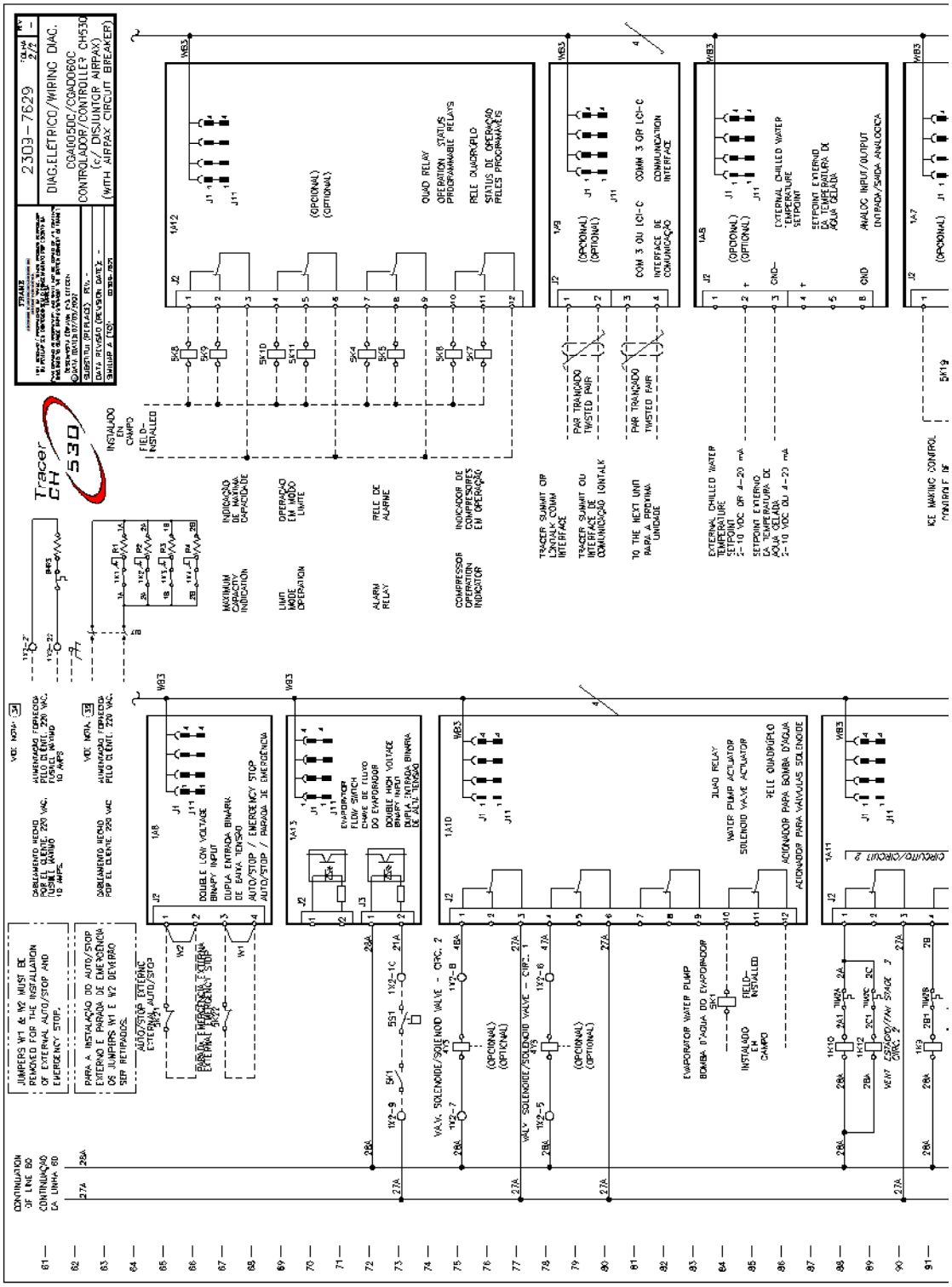

Wiring Diagram

Fig. 31 - Power and command wiring diagram CGAD 050C / CGAD060C - Sheet 2/2 - Part II

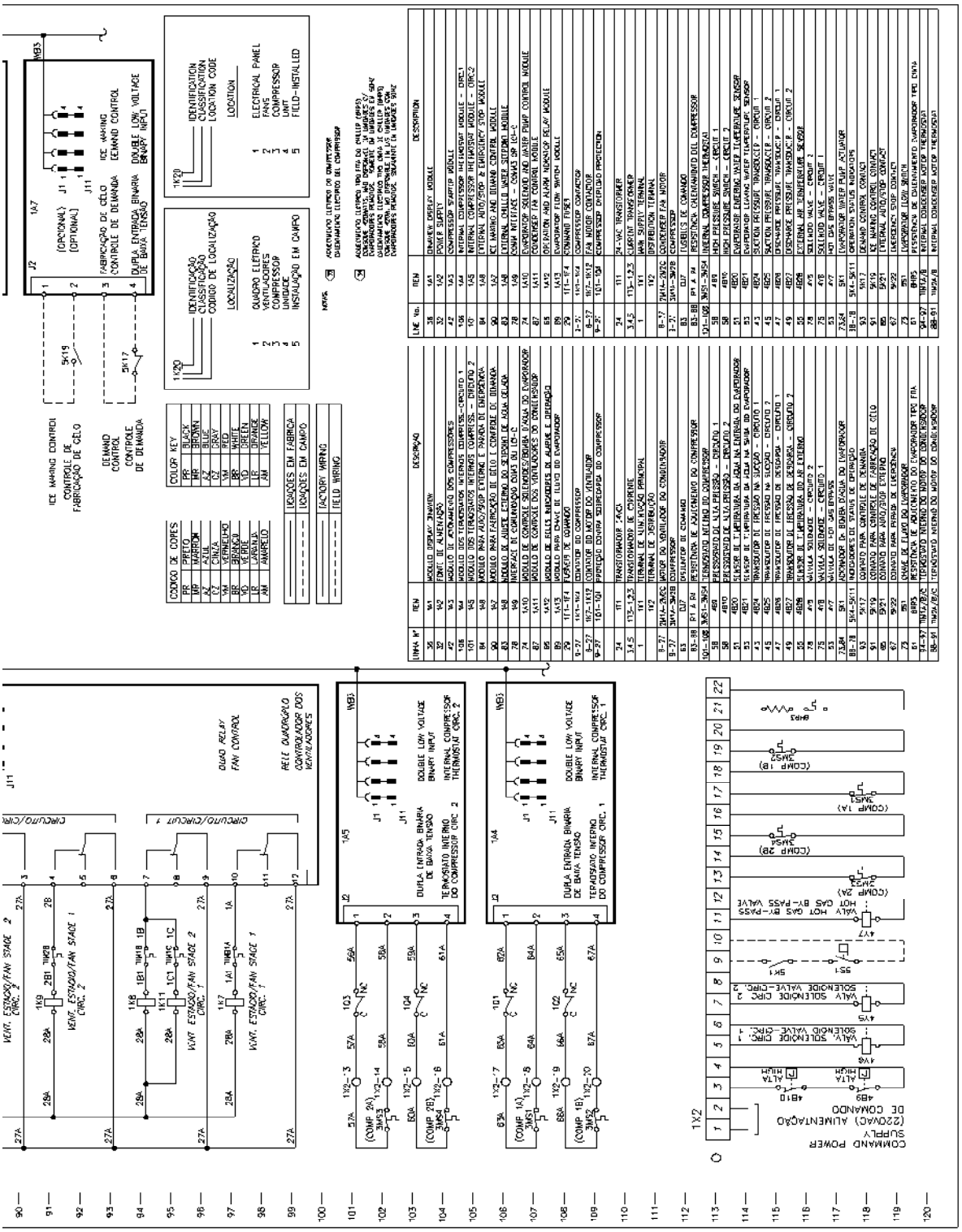

Wiring Diagram

Fig. 32 - Layout CGAD 050C / CGAD060C

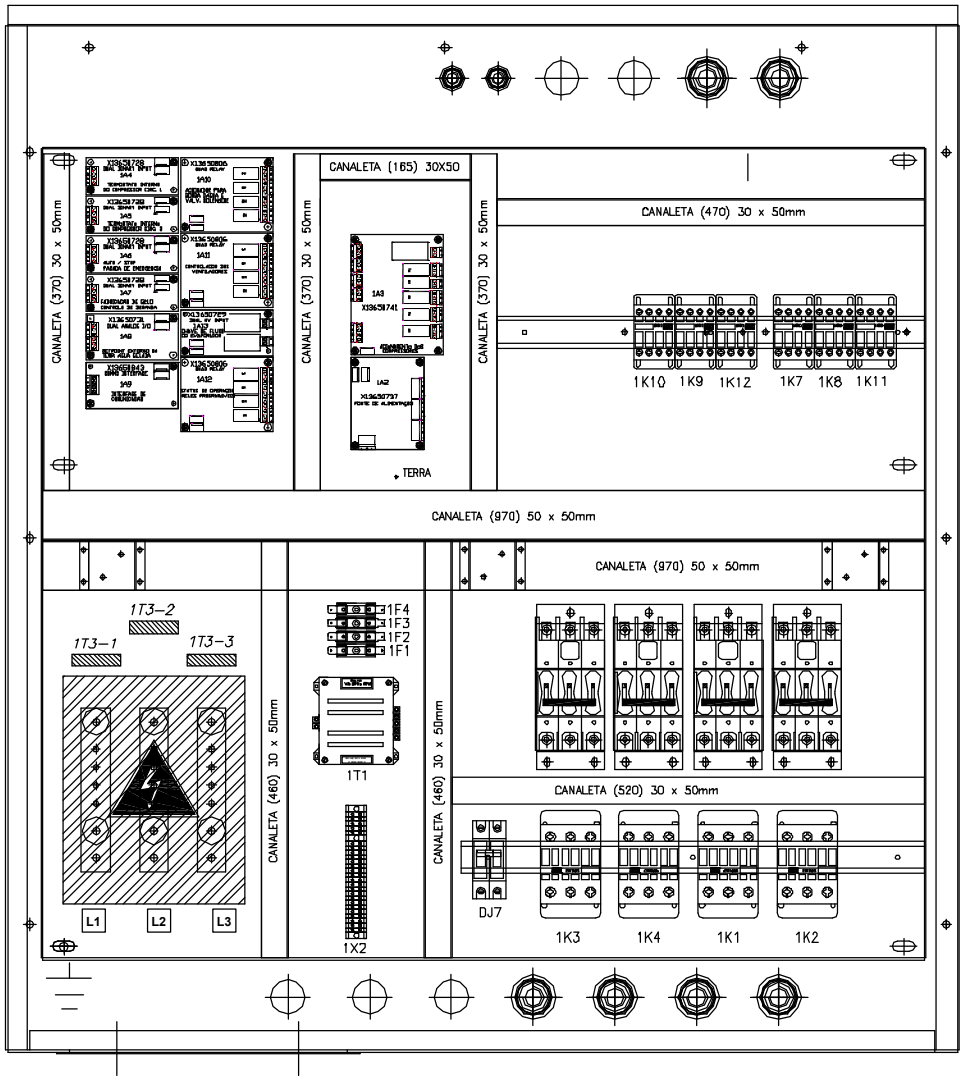

Wiring Diagram

Fig. 33 - Power and command wiring diagram CGAD 070C - Sheet 1/2

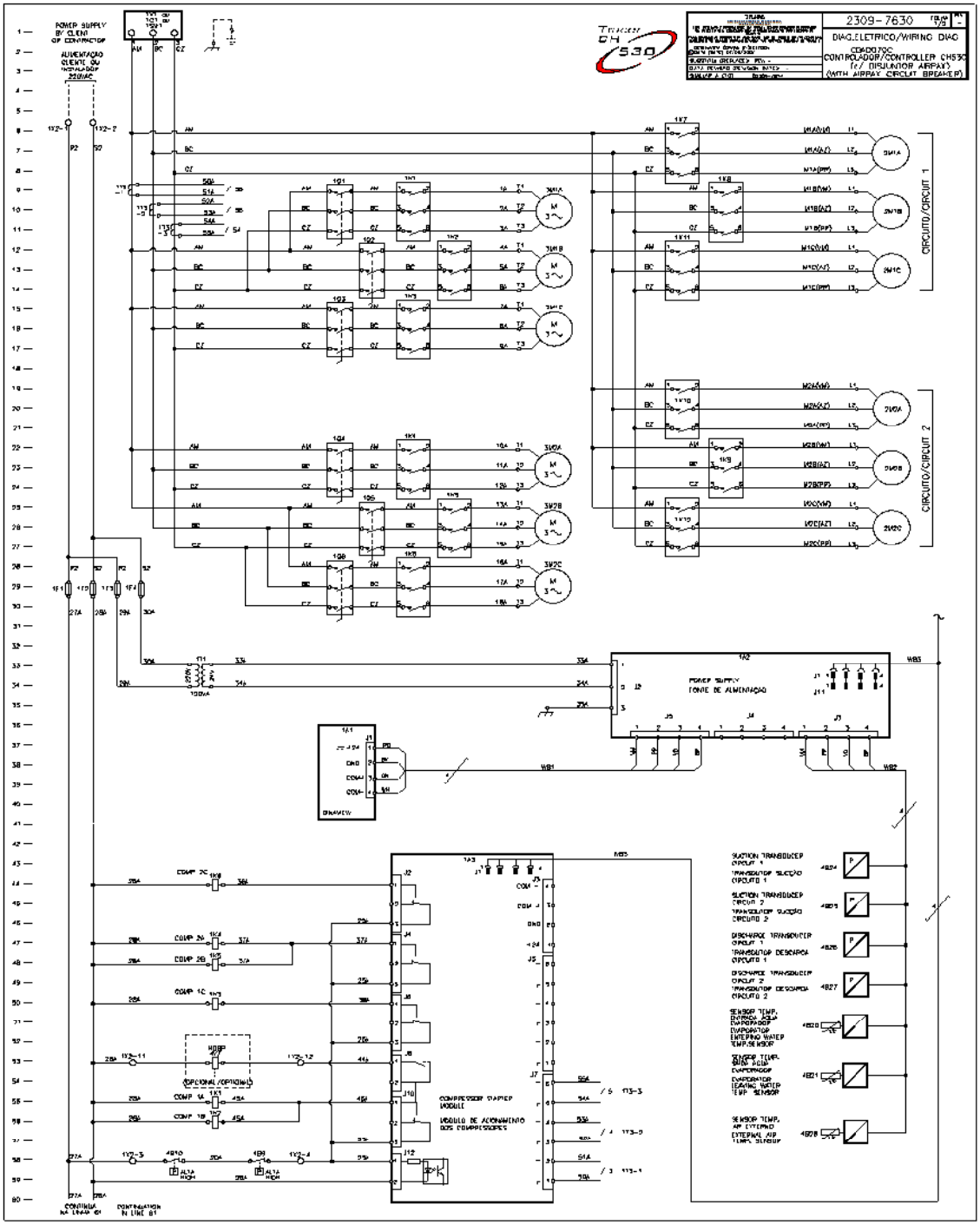

Wiring Diagram

Fig. 34 - Power and command wiring diagram CGAD 070C - Sheet 2/2 - Part I

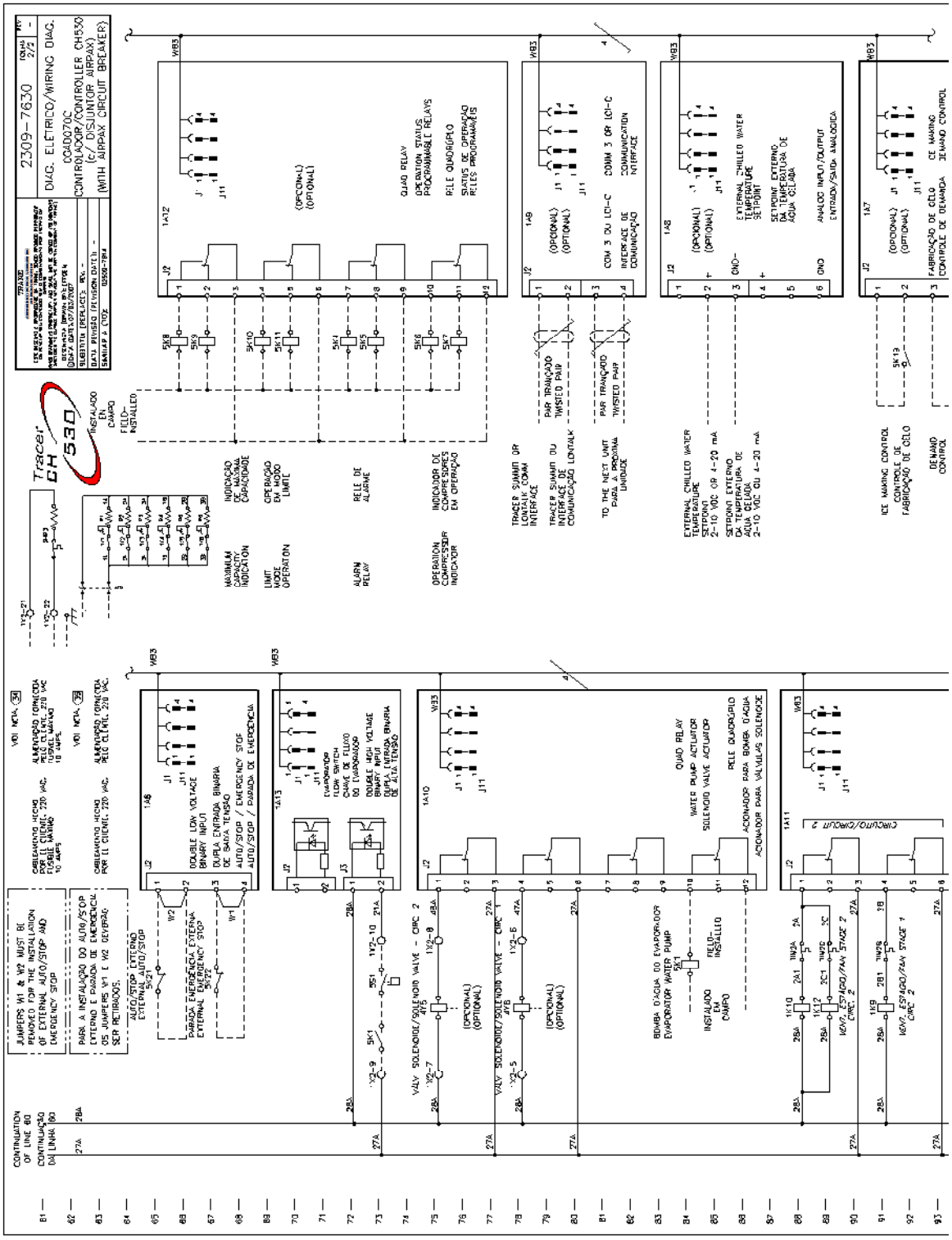

Wiring Diagram

Fig. 35 - Power and command wiring diagram CGAD 070C - Sheet 2/2 - Part II

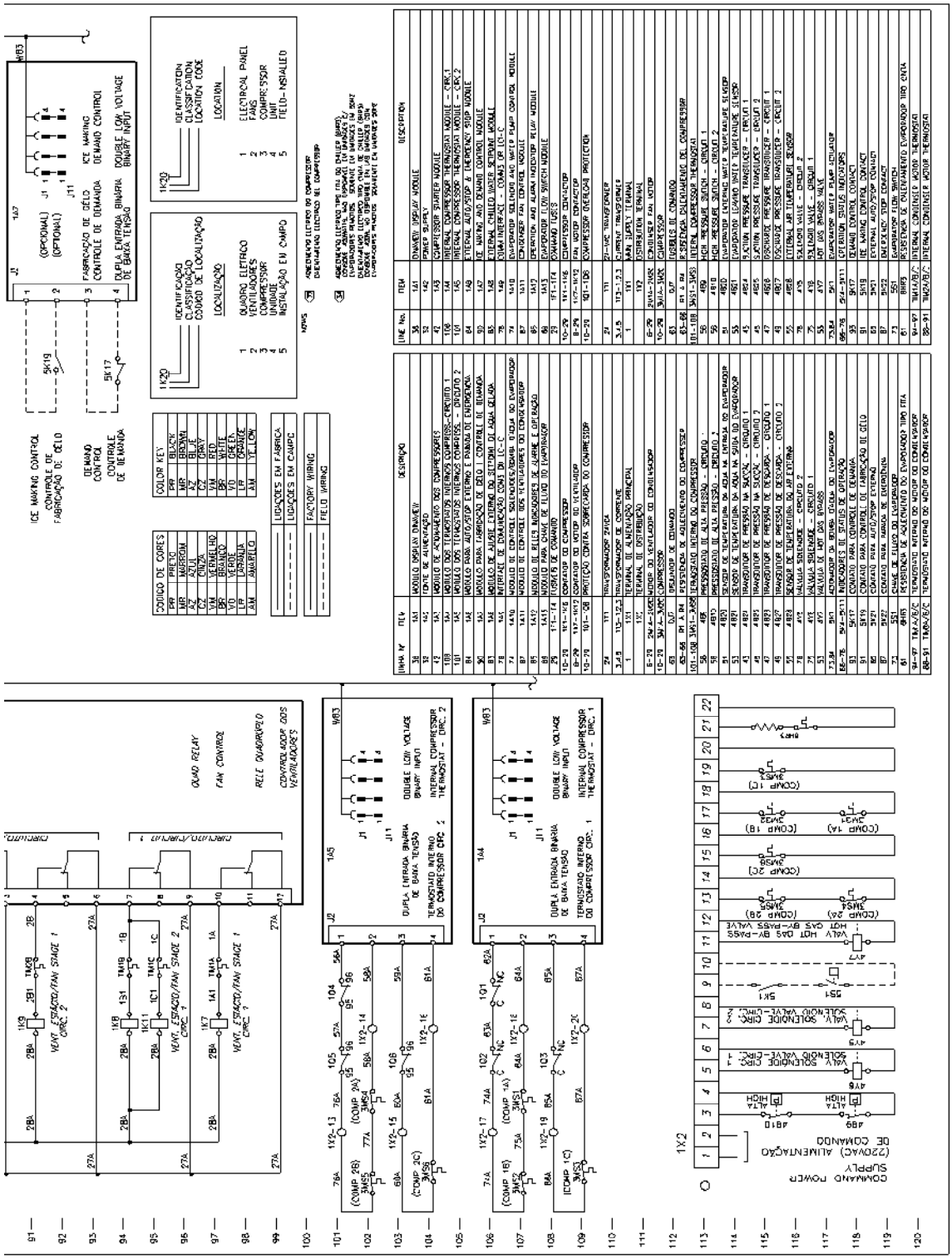

Wiring Diagram

Fig. 36 - Layout CGAD 070C

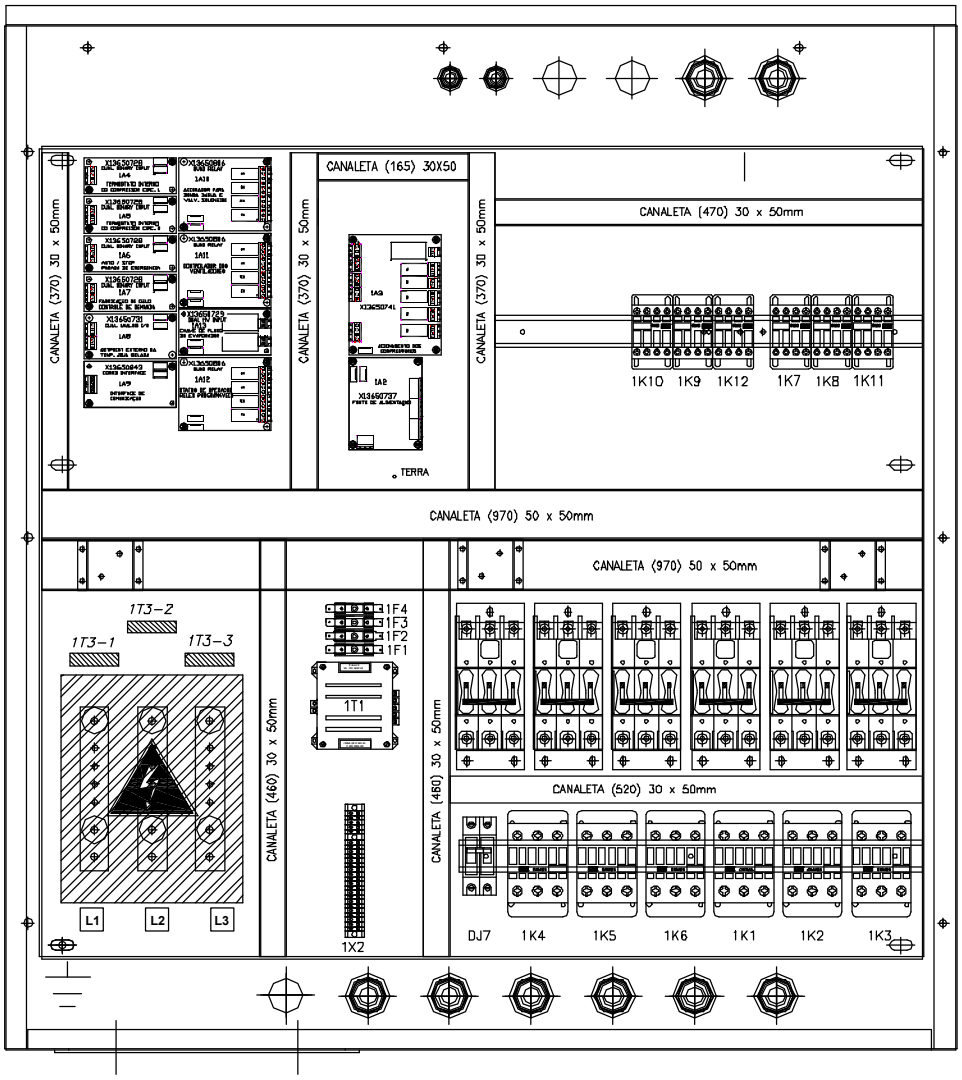

Wiring Diagram

Fig. 37 - Power and command wiring diagram CGAD080C/CGAD090C - Sheet 1/2

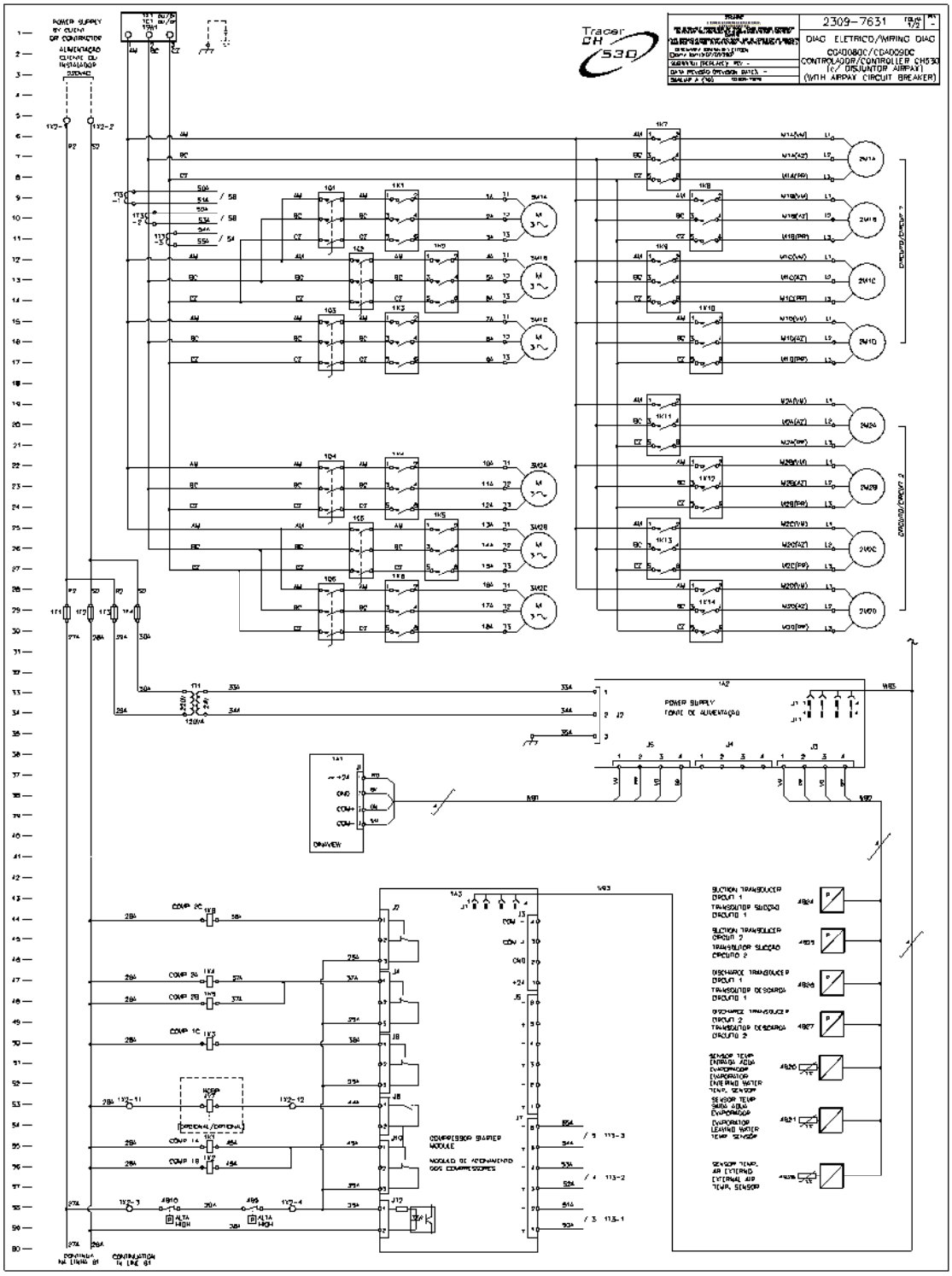

Wiring Diagram

Fig. 38 - Power and command wiring diagram CGAD080C/ CGAD090C - Sheet 2/2 - Part I

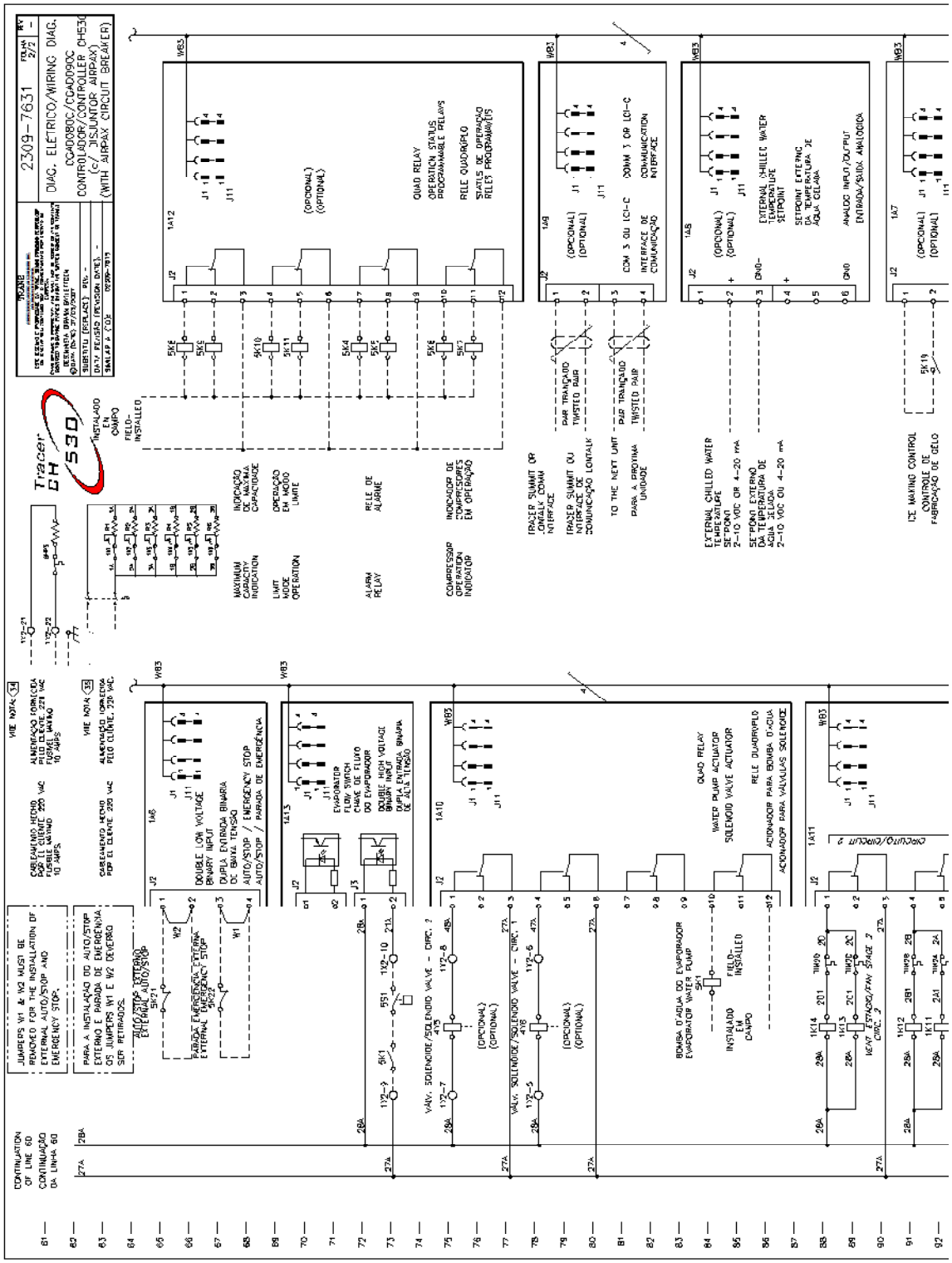

Wiring Diagram

Fig. 39 - Power and command wiring diagram CGAD080C/ CGAD090C - Sheet 2/2 - Part II

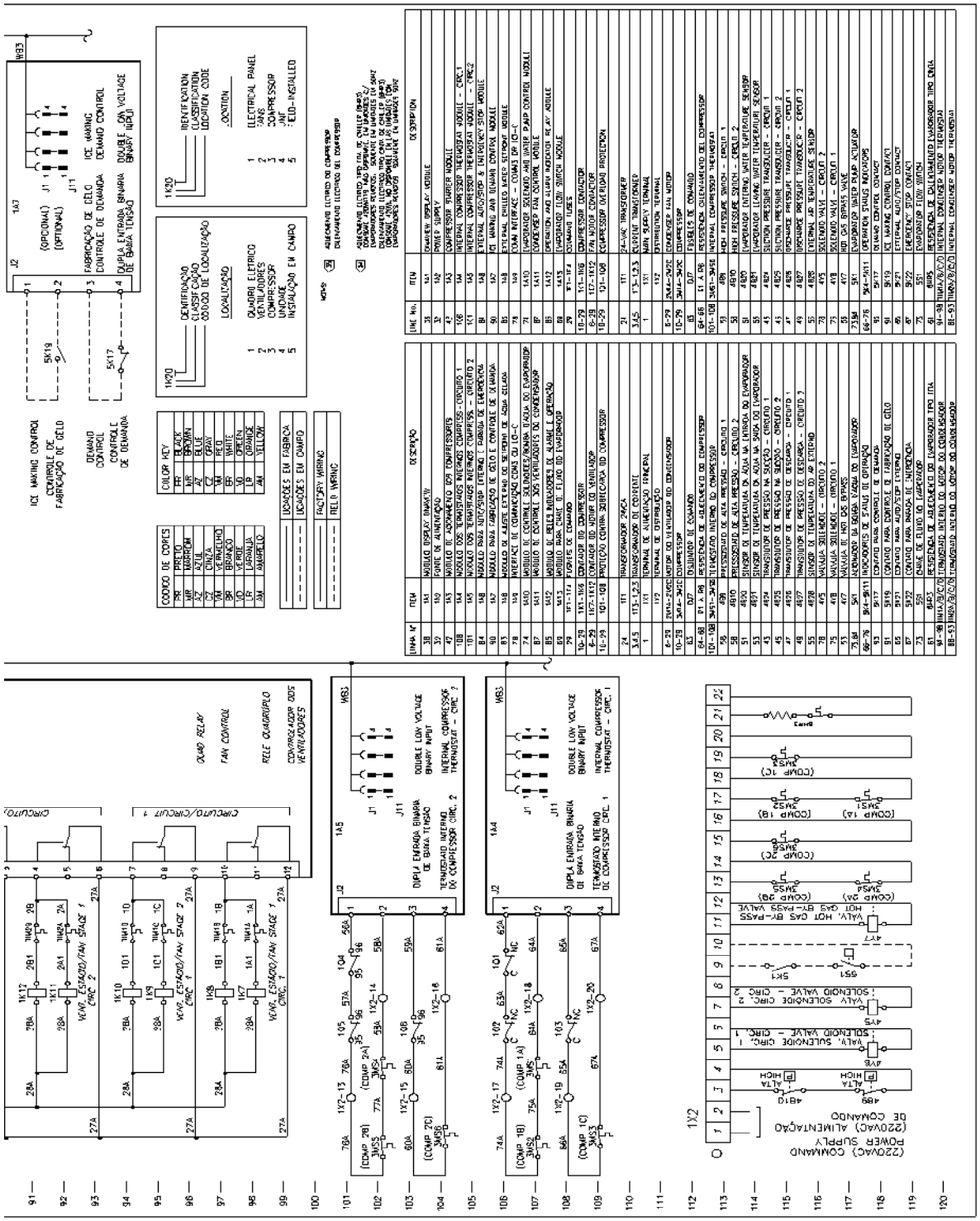

Wiring Diagram

Fig. 40 - Layout CGAD080C/ CGAD090C

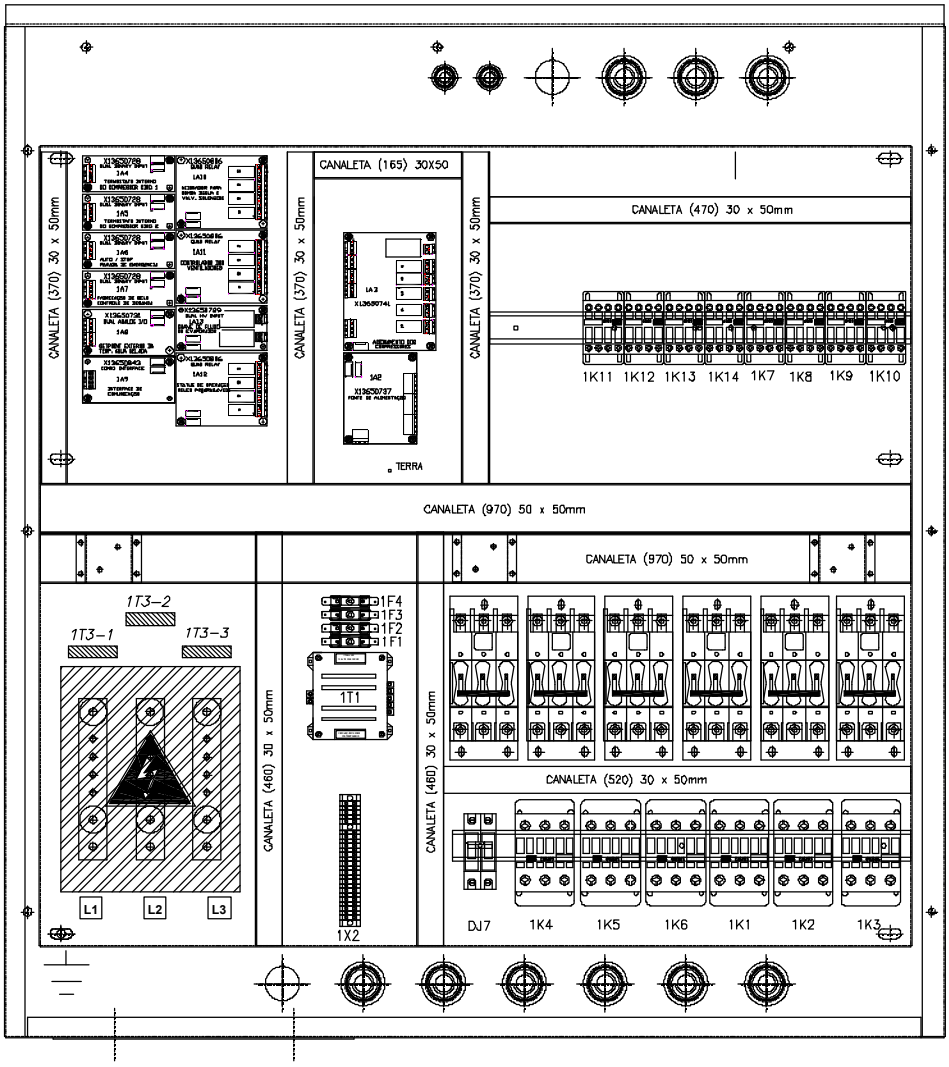

Wiring Diagram

Fig. 41 - Power and command wiring diagram CGAD100 - Part I

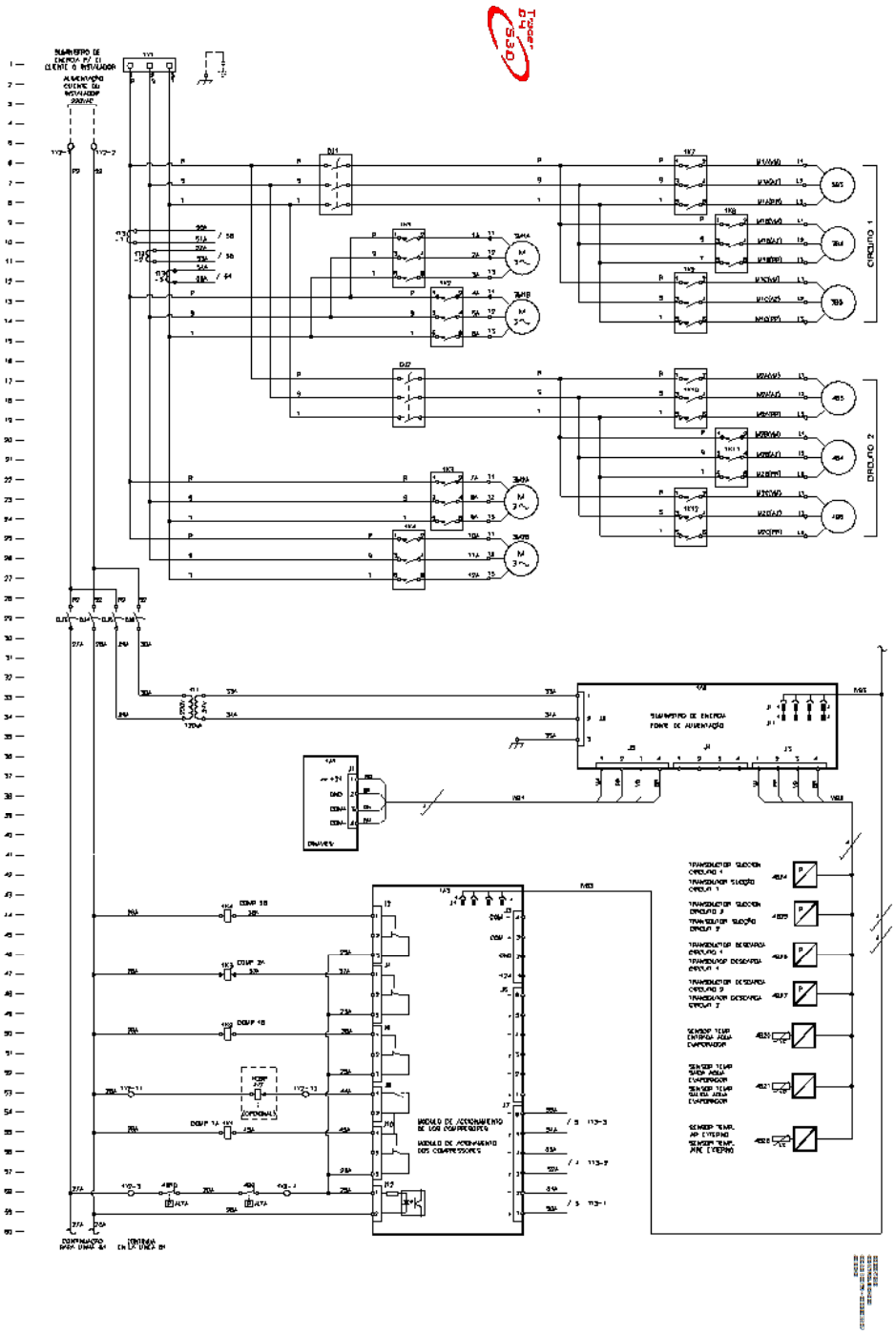

Wiring Diagram

Fig. 42 - Power and command wiring diagram CGAD100 - Part II

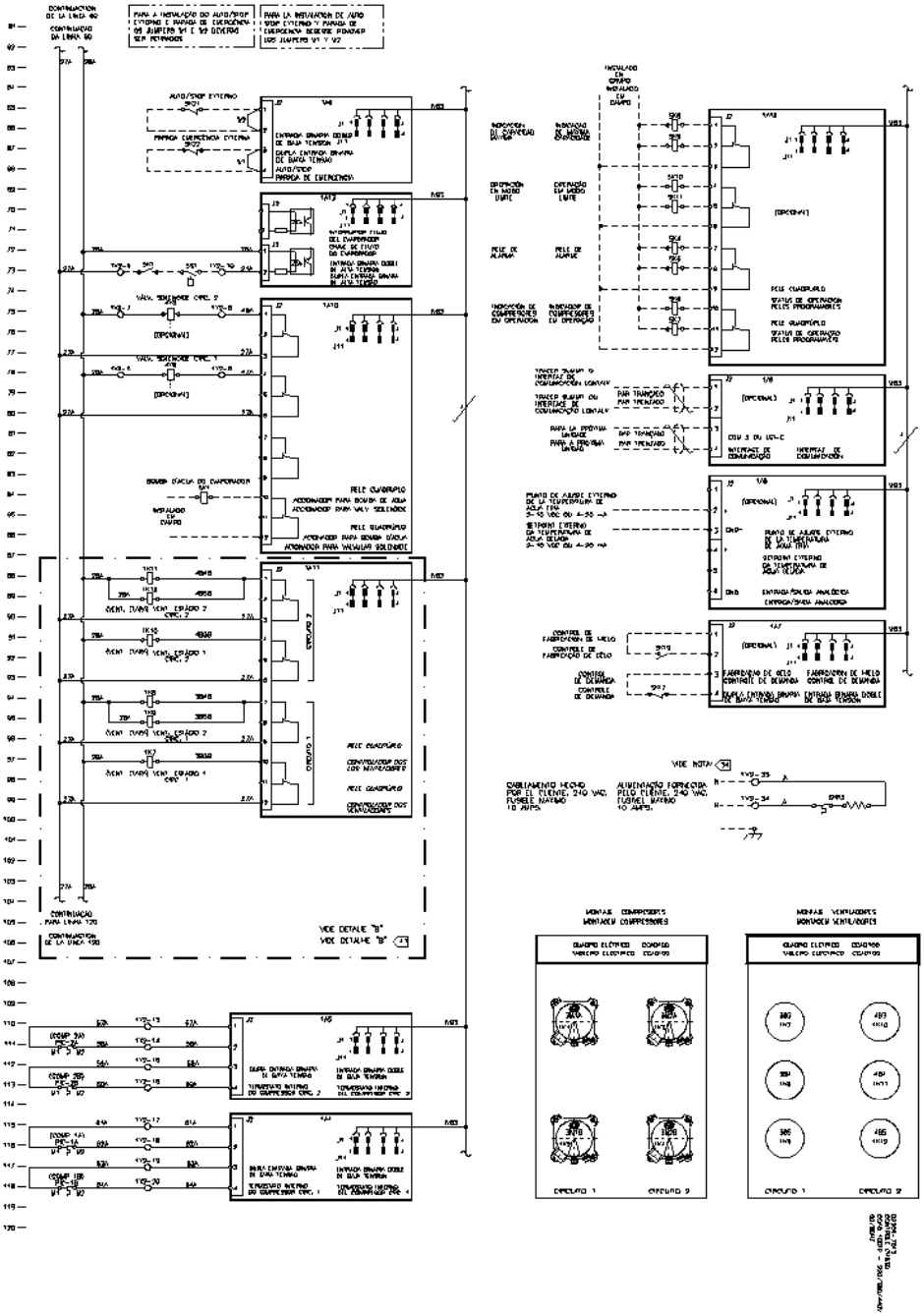

Wiring Diagram

Fig. 43 - Power and command wiring diagram CGAD100 - Part III

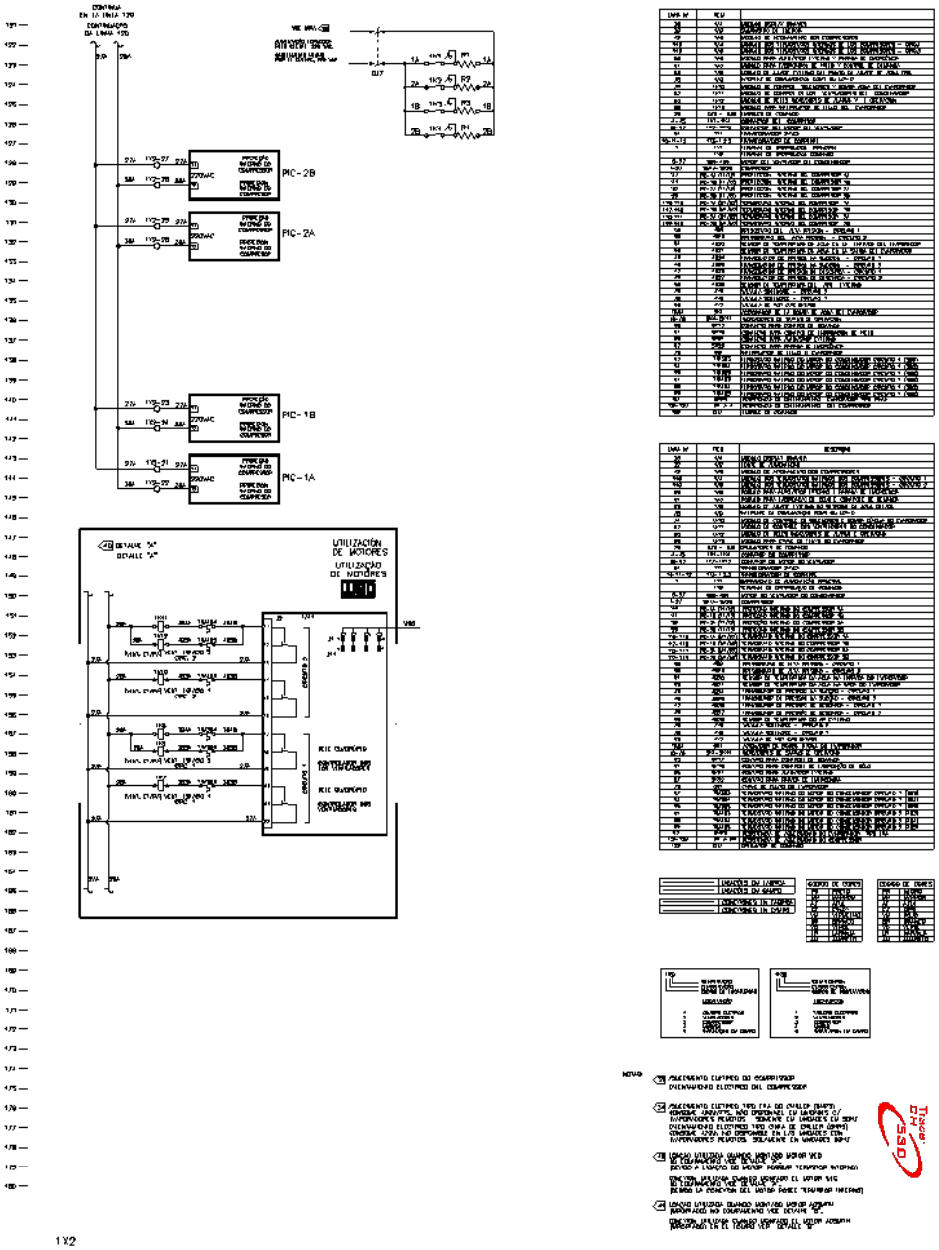

Wiring Diagram

Fig. 44 - Layout diagram CGAD100

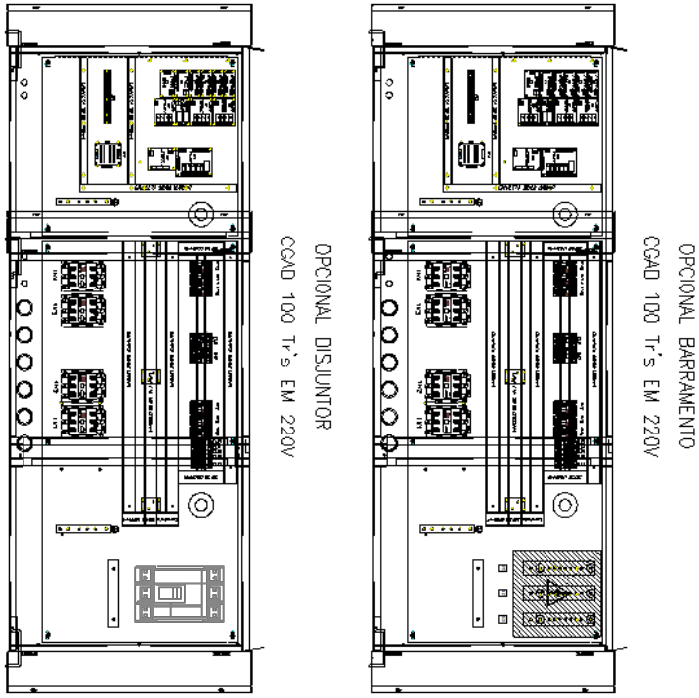

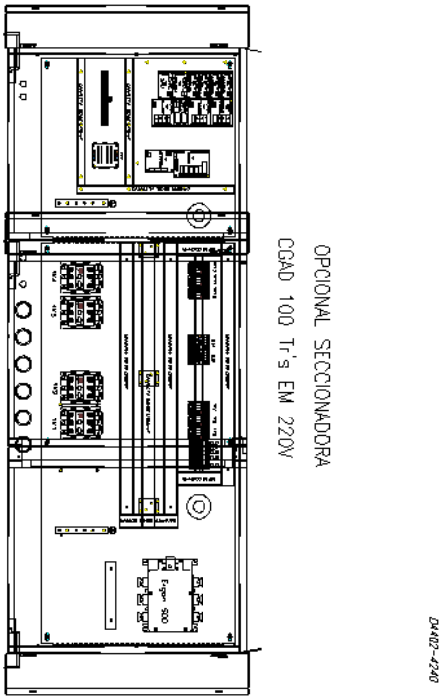

Wiring Diagram

Fig. 45 - Power and command wiring diagram CGAD120 - Part I

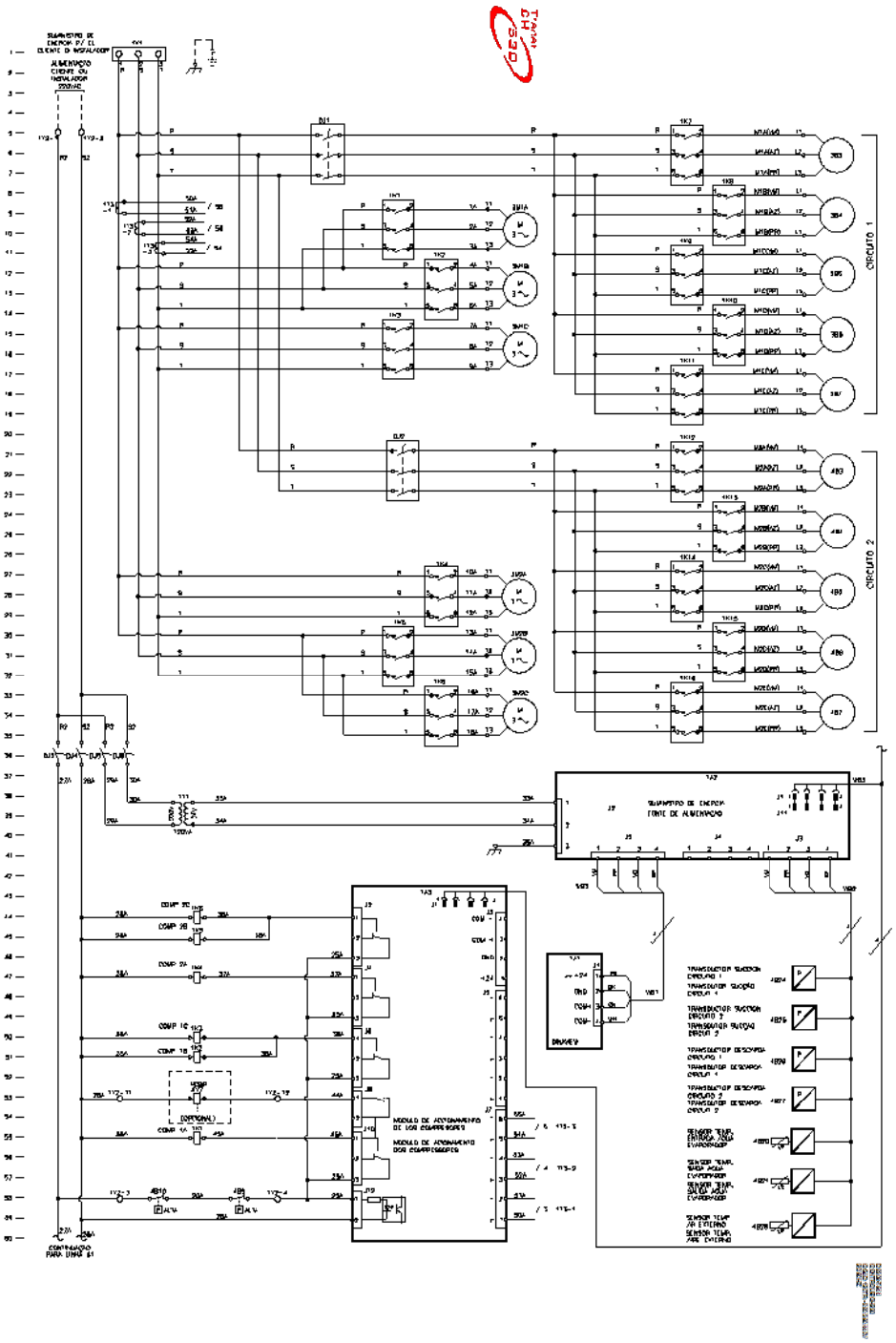

Wiring Diagram

Fig. 46 - Power and command wiring diagram CGAD120 - Part II

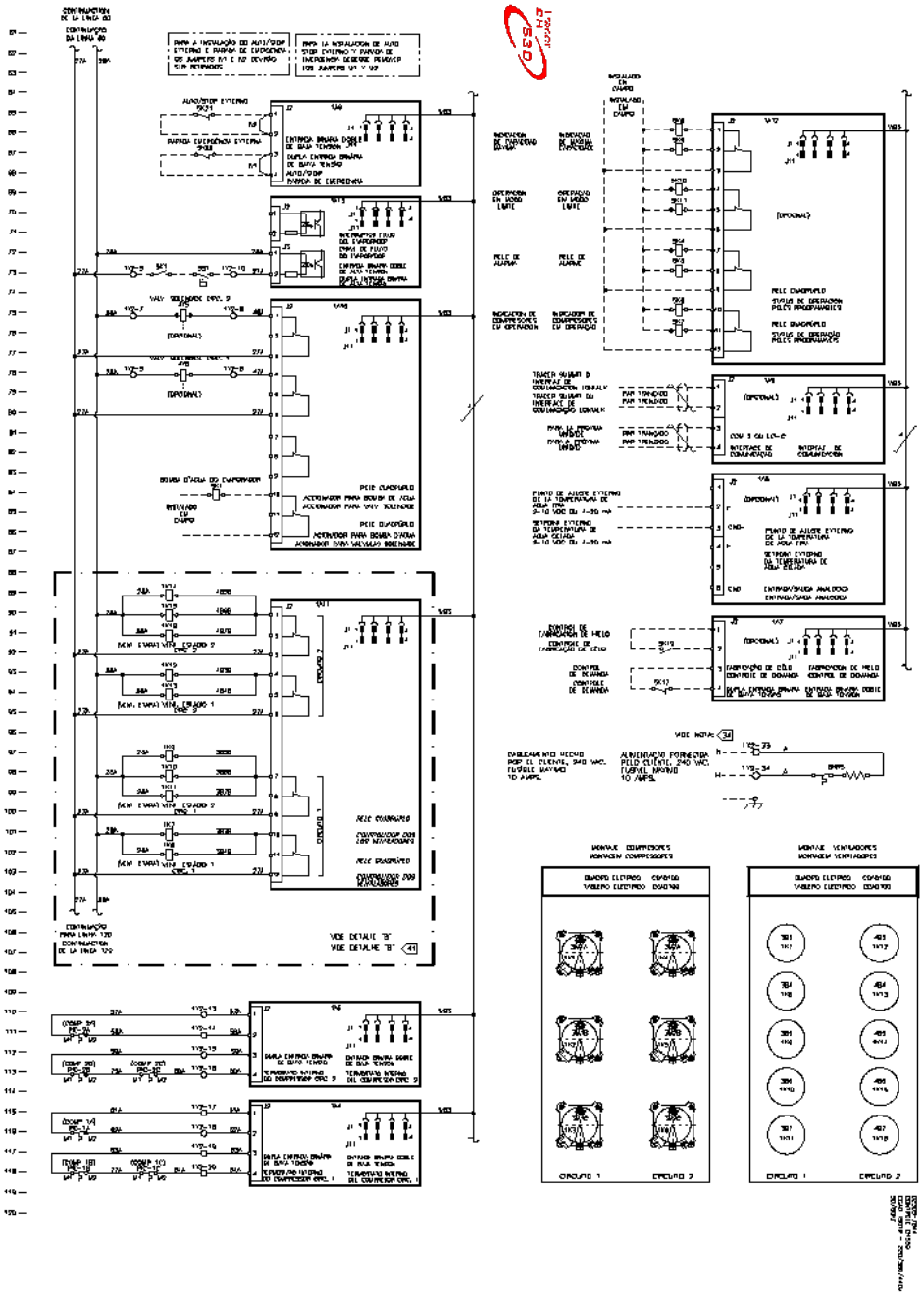

Wiring Diagram

Fig. 47 - Power and command wiring diagram CGAD 120 - Part III

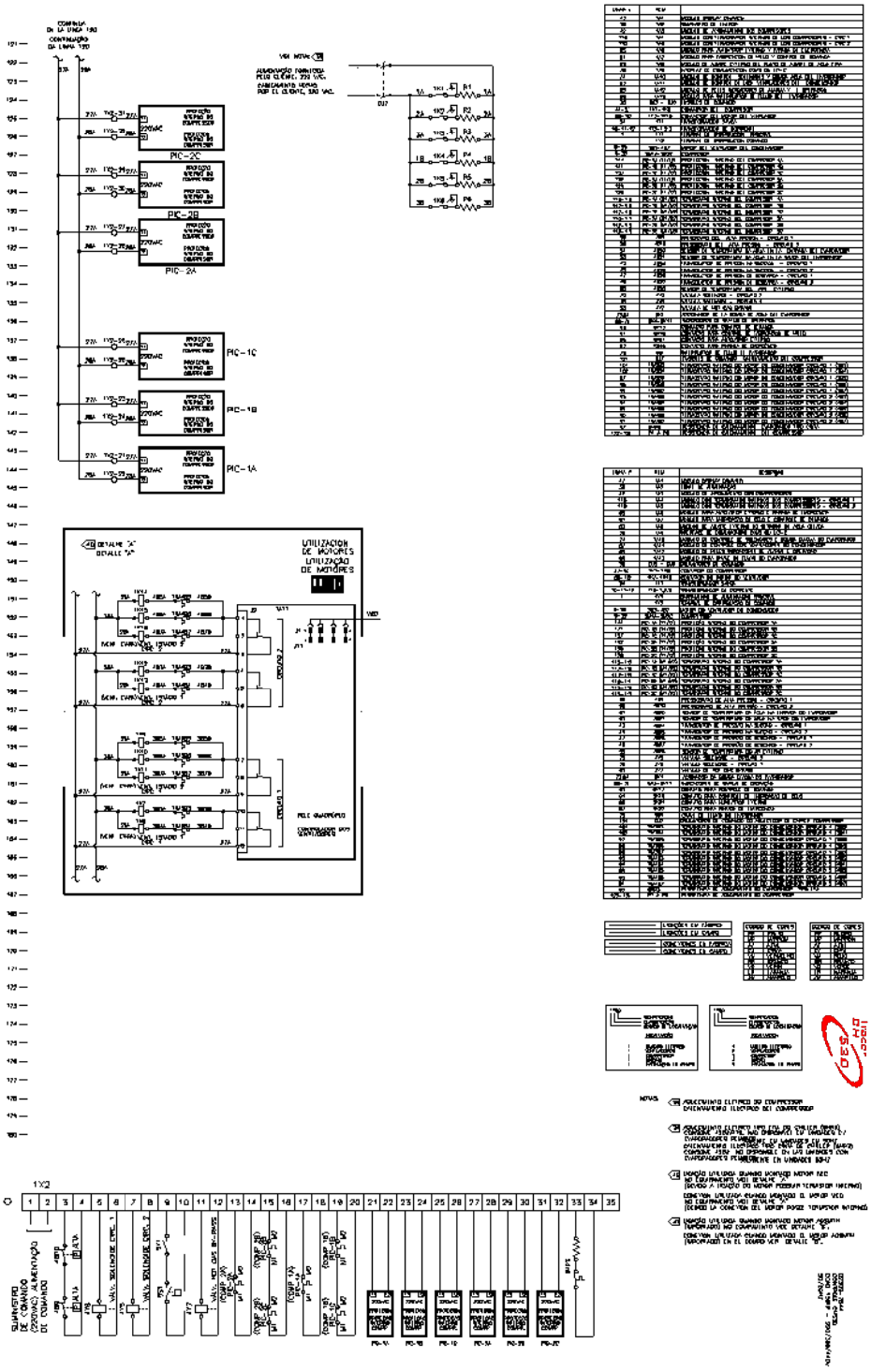

Wiring Diagram

Fig. 48 - Layout diagram CGAD 120

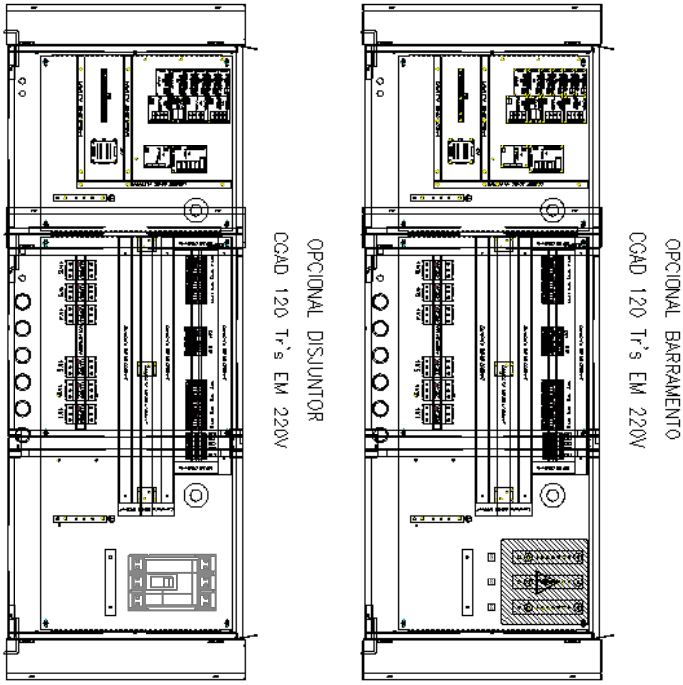

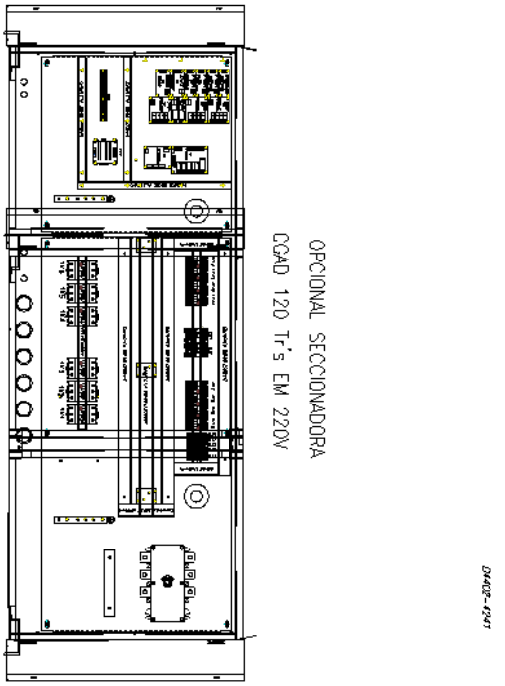

Wiring Diagram

Fig. 49 - Power and command wiring diagram CGAD150 - Part I

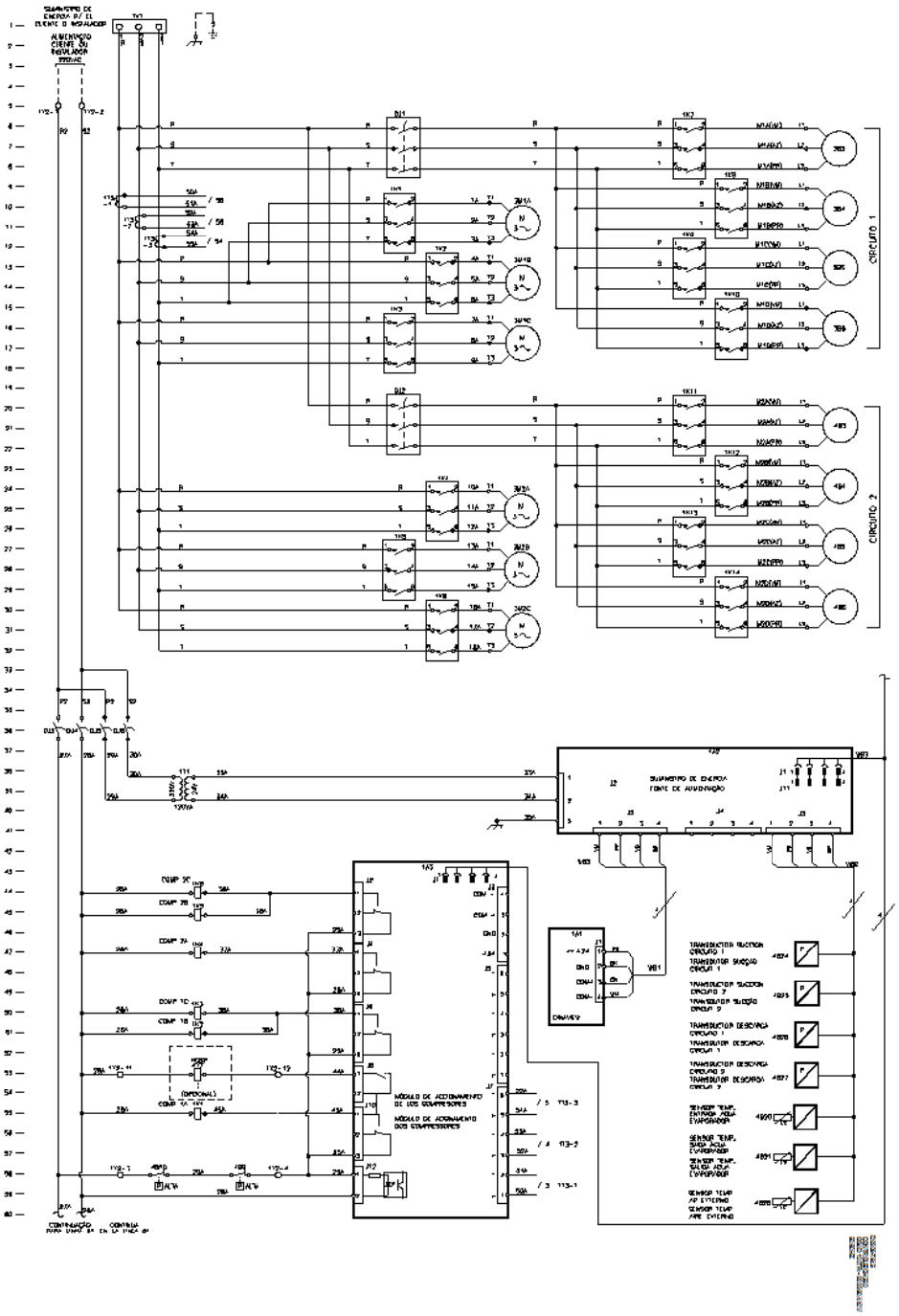

Wiring Diagram

Fig. 50 - Power and command wiring diagram CGAD150 - Part II

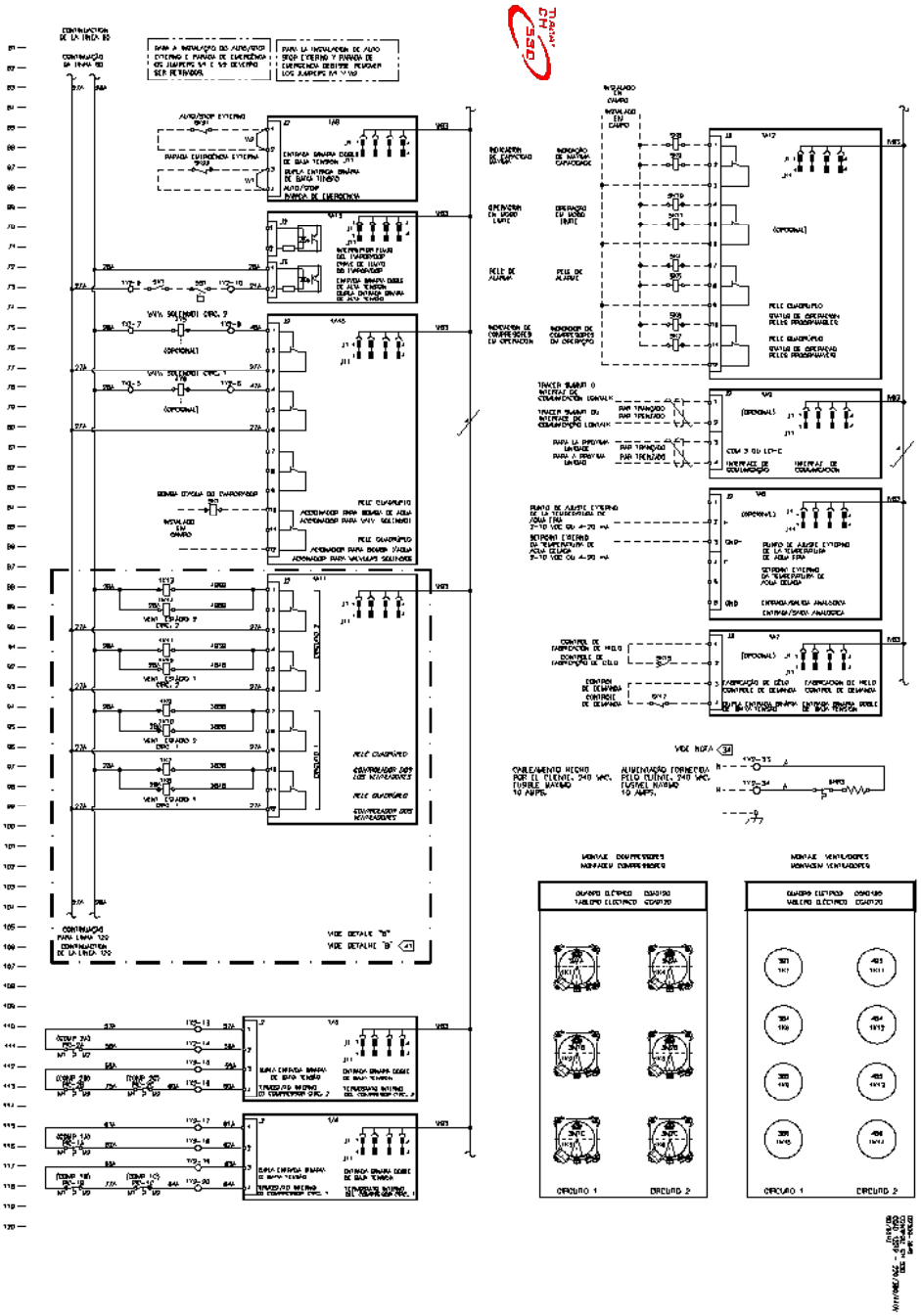

Wiring Diagram

Fig. 51 - Power and command wiring diagram CGAD150 - Part III

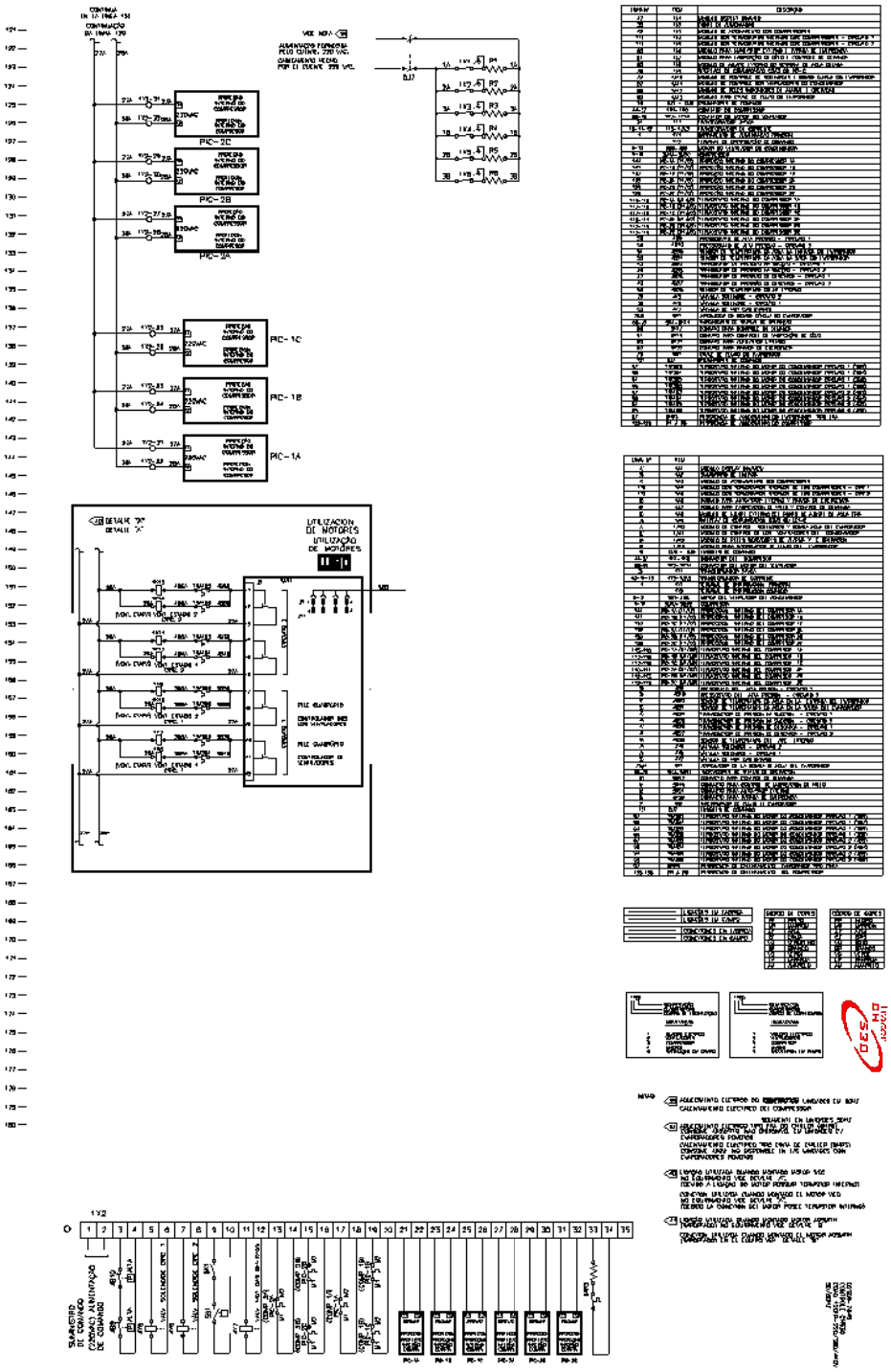

Wiring Diagram

Fig. 52 - Layout diagram CGAD150

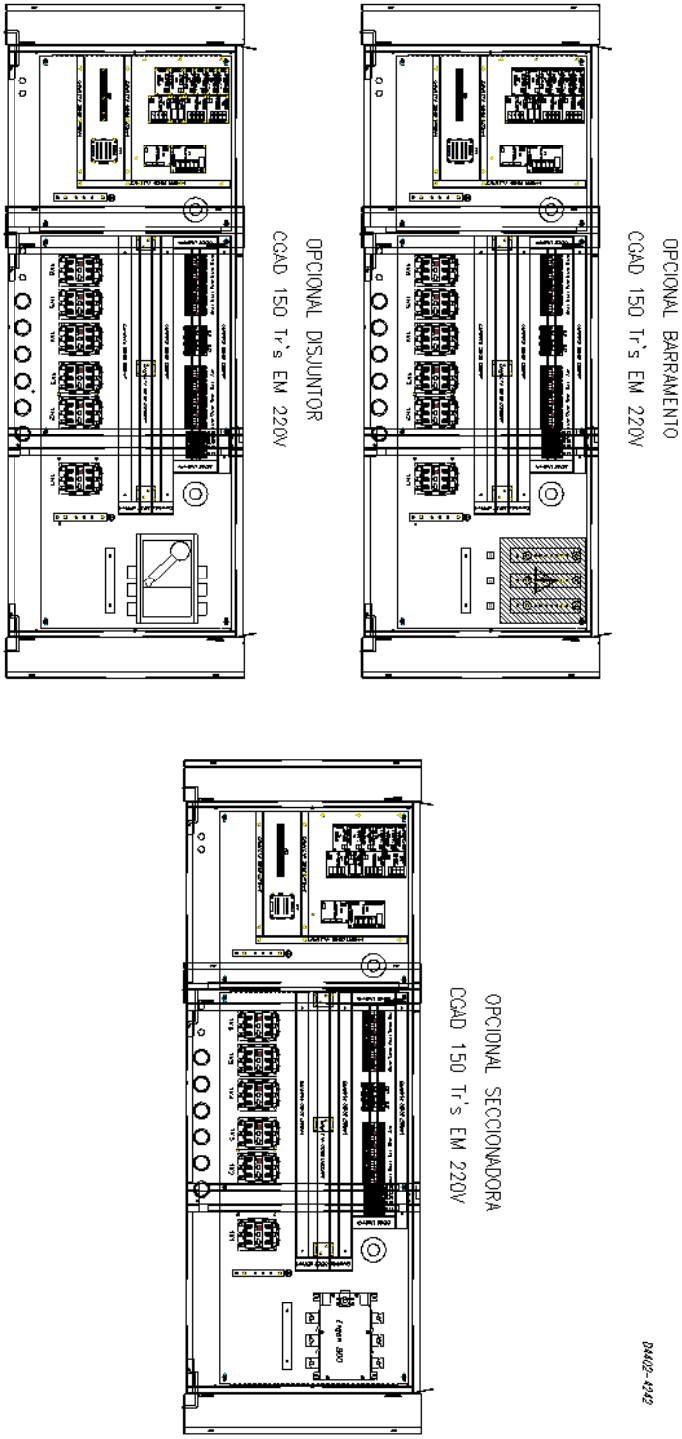

Wiring Diagram

Fig. 53 - Layout diagram CGAD 100/125/150 - with optionals

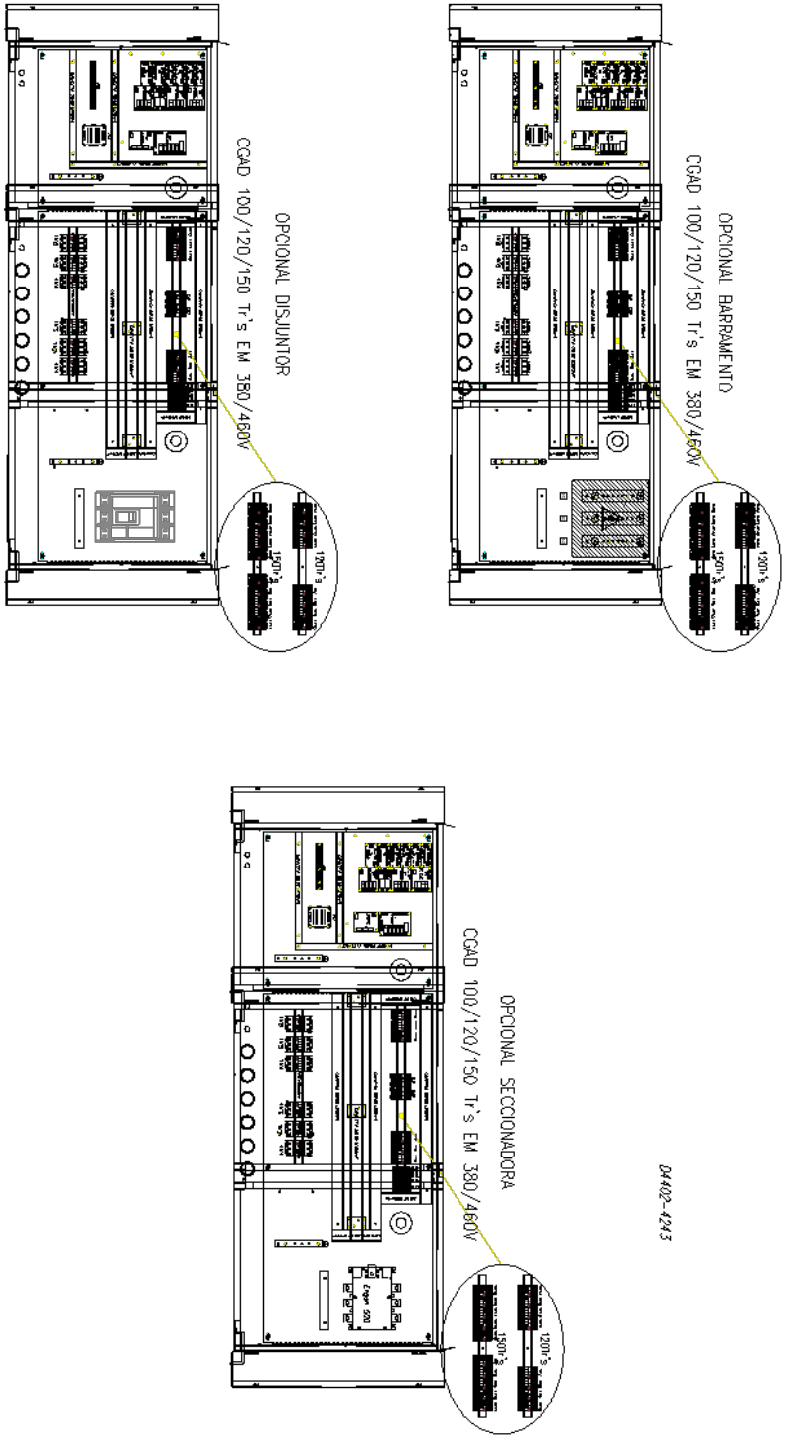

Diagnostics
CH 530

Code	Diagnostic	Description of Problem	Type Reset
E5	Phase Reversal	A phase reversal was detected on the equipment's energy supply.	Local
E4	Current L1 Loss	The L1 current sensor detected a loss of current.	Local
E4	Current L2 Loss	The L2 current sensor detected a loss of current.	Local
E4	Current L3 Loss	The L3 current sensor detected a loss of current.	Local
6B6	Starter Module Memory Error Type 2	Detecting error in the configuration in the starter module memory of the compressors.	Local
1A0	Power Loss	The current sensors detected a three-phase power loss during the operation. If the current is less than 10% of the nominal current, the equipment will shut down in 2.64 seconds.	Remote
CA	Starter Contactor Interrupt Failure	A current level 10% higher than the maximum current of operation for the equipment was detected on one or more phases of the three-phase power supply.	Local
D9	MP: Reset Has Occurred	The controller was reset after receiving a new configuration and installation of a new version of the control software. This message is automatically deactivated and only visualized through the log of diagnostics.	NA
B5 or B6	Low Pressure Cutout	The equipment's suction pressure dropped below 7 psi, causing the compressor(s) to turn off.	Local
6B6	Low Suction Refrigerant Pressure	A suction pressure below that specified for the protection system was detected. This diagnostic will be automatically reset when the pressure reaches adequate values.	Local
BA or BC	High Motor Temp/Overload Trip Cprsr A	The internal thermostat of the compressor identified a high temperature or the protection against the compressor's overload detected a current level above the protection level established.	Local
BB or BD	High Motor Temp/Overload Trip Cprsr A	The internal thermostat of the compressor identified a high temperature or the protection against the compressor's overload detected a current level above the protection level established.	Local
390	BAS Failed to Establish Communication	The controller was informed that it is linked to the Management System (BAS) and cannot make communication with it.	Remote
398	BAS Communication Lost	The COMM3 communication module of the controller lost communication with the Management System (BAS)	Remote
87	External Chilled Water Setpoint	A. The external control module of the chilled water temperature setpoint received a control voltage or current above or below the specified limits. (0 to 10 VDC or 4 to 10 ma).	Remote
		B. The control module presented an operational failure or there is a bad contact on the connection cable of the modules (LLID).	
8C or 8D	Circuit Pumpdown Terminated	A. When activated, the operational reclaiming normally is interrupted by the low pressure control. This message indicates that the low pressure control did not detect a low pressure of 10 PSI after 30 seconds after the beginning of the reclaiming.	Remote
		When the reclaiming service is activated, the low pressure control did not detect a low pressure of 10 PSI after 1 minute from the beginning of the reclaiming.	
8A	Chilled Water Flow (Entering Water Temp)	It was detected that the temperature of the entering water from the evaporator is 3.6°C below the evaporator's leaving water temperature, which indicates a lack of water flow through the evaporator.	Remote
8E	Evaporator Entering Water Temp Sensor	Temperature sensor has a defect or a bad contact on the connection cable of the sensors.	Remote
AB	Evaporator Leaving Water Temp Sensor	Temperature sensor has a defect or a bad contact on the connection cable of the sensors.	Remote
9A	Condenser Entering Water Temp Sensor	Temperature sensor has a defect or a bad contact on the connection cable of the sensors.	Remote
9B	Condenser Leaving Water Temp Sensor	Temperature sensor has a defect or a bad contact on the connection cable of the sensors.	Remote
6B6	Discharge Pressure Transducer	Pressure transducer has a defect or a bad contact on the connection cable of the sensors.	Remote
6B6	Suction Pressure Transducer	Pressure transducer has a defect or a bad contact on the connection cable of the sensors.	Remote

Diagnostics
CH 530

Code	Diagnostic	Description of Problem	Type Reset
C5	Low Evap Leaving Water Temp: Unit Off	It was detected that the leaving water temperature of the evaporator is 3.6ºC below the anti-freezing protection temperature at the moment when all the compressors are turned off. The auto reset should occur when the water temperature reaches 3.6°C above the anti-freezing protection temperature.	Remote
C6	Low Evap Leaving Water Temp: Unit On	It was detected that the leaving water temperature of the evaporator is 3.6ºC below the anti-freezing protection temperature at the moment when one or more compressors are turned on. The auto reset should occur when the water temperature reaches 3.6°C above the anti-freezing protection temperature.	Remote
6B6	High Evaporator Water Temperature	Evaporator Leaving Water Temperature is above 46ºC. This message will automatically be erased when the leaving water temperature drops below 43ºC. This diagnostic has the purpose of protecting the evaporator from damage due to high water temperature inside of it. The water pump should not operate while this diagnostic is active.	Local
384	Evaporator Water Flow Overdue	Water flow in the evaporator was not detected by the contact of the flow switch. This diagnostic will be automatically reset when the water flow is reestablished.	Remote
ED	Evaporator Water Flow Lost	After the presence of water flow was established in the evaporator, a posterior lack of water flow was detected by the flow switch.	Remote
DC	Condenser Water Flow Overdue	Water flow in the condenser was not detected by the contact of the flow switch. This diagnostic will be automatically reset when the water flow is reestablished.	Remote
F7	Condenser Water Flow Lost	After the presence of water flow was established in the condenser, a posterior lack of water flow was detected by the flow switch.	Remote
F5	High Pressure Cutout	The high-pressure switch was kept open for more than 3 seconds.	Local
FD	Emergency Stop	The controller received a signal to turn off the equipment from the Emergency Stop module.	Local
A1	Outdoor Air Temp Sensor	Temperature sensor has a defect or a bad contact on the connection cable of the sensors.	Remote
1AD	MP: Non-Volatile Memory Reformatted	The controller detected an error in its non-volatile memory and reformatted it. The configurations of the controller should be checked.	Remote
2,00E+06	Check Clock	An operational failure of the controller's internal clock was detected. Check the clock's battery and change if needed. This diagnostic will be automatically erased when the clock is corrected.	Remote
1D1	MP: Could not Store Starts and Hours	It was detected that there was a failure in the storage on the compressors' number of starts and number of hours in operation due to power loss. The data related to the last 24 hours most likely were lost.	Remote
1D2	MP: Non-Volatile Block Test Error	An error was detected on one of the controller's non-volatile memory block. Check the configurations of the controller.	
6B6	Starts/Hours Modified - Compressor X	The compressor's counter of number of starts and number of hours in operation was modified by TechView. The diagnostic will indicate to which compressor belongs the modified counter. This message is immediately reset and will only be able to be viewed in the log of diagnostics.	NA

Diagnostics
CH 530

Code	Diagnostic	Description of Problem	Type Reset
5C4	Excessive Loss of Comm	A loss of communication was detected with more than 20 %of the modules and sensors installed. Check the voltage on the modules or poor contact on the connecting cable of the modules/sensors (LLID).	Remote
5DD	Comm Loss: External Auto/Stop	A loss of communication was detected between the controller and the External Auto/Stop module.	Remote
5DE	Comm Loss: Emergency Stop	A loss of communication was detected between the controller and the Emergency Stop module.	Remote
5,00E+01	Comm Loss: Ext Ice Building Ctrl Input	A loss of communication was detected between the controller and the Comm Loss: Ice Building module. The equipment is placed in a normal mode of operation. Ice building is not permitted until the problem is corrected.	Remote
5,00E+02	Comm Loss: Outdoor Air Temperature	A loss of communication was detected between the controller and the outdoor air temperature sensor. This will put in operation all of the condenser's fans when the equipment has an air condensation system.	Remote
5,00E+03	Comm Loss: Evap Leaving Water Temp	A loss of communication was detected between the controller and the temperature sensor of the water leaving the evaporator.	Remote
5,00E+04	Comm Loss: Evap Entering Water Temp	A loss of communication was detected between the controller and the temperature sensor of the water entering the evaporator.	Remote
6B6	Comm Loss: Condenser Leaving Water Temp	A loss of communication was detected between the controller and the temperature sensor of the water leaving the condenser.	Remote
6B6	Comm Loss: Condenser Entering Water Temp	A loss of communication was detected between the controller and the temperature sensor of the water entering the condenser.	Remote
6B6	Comm Loss: Discharge Pressure Transducer	A loss of communication was detected between the controller and the discharge pressure transducer.	Remote
6B6	Comm Loss: Suction Pressure Transducer	A loss of communication was detected between the controller and the suction pressure transducer.	Remote
5,00E+09	Comm Loss: External Chilled Water Setpoint	A loss of communication was detected between the controller and the external chilled water setpoint.	Remote
5EB	Comm Loss: High Pressure Cutout Switch	A loss of communication was detected between the controller and the high pressure cutout switch.	Remote
5EF	Comm Loss: Evaporator Water Flow Switch	A loss of communication was detected between the controller and the module of the evaporator water flow switch.	Remote
6B6	Comm Loss: Condenser Water Flow Switch	A loss of communication was detected between the controller and the module of the condenser water flow switch.	Remote
5F8	Comm Loss: Evaporator Water Pump Relay	A loss of communication was detected between the controller and the module of the evaporator water pump relay.	Remote
5F9	Comm Loss: Condenser Water Pump Relay	A loss of communication was detected between the controller and the module of the condenser water pump relay.	Remote
69D	Comm Loss: Local BAS Interface	A loss of communication was detected between the controller and the communication module that connects the equipment to the managing system (BAS)	Remote

6B6	Comm Loss: Compressor Inhibit Input	A loss of communication was detected between the controller and the inhibit input module.	Remote
6B6	Comm Loss: Solenoid Valve	A loss of communication was detected between the controller and the solenoid valve control module.	Remote
6B6	Comm Loss: Motor Temp/Overload Cprsr A	A loss of communication was detected between the controller and the module for protecting compressor A.	Remote
6B6	Comm Loss: Motor Temp/Overload Cprsr B	A loss of communication was detected between the controller and the module for protecting compressor B.	Remote
6B6	Comm Loss: Condenser Fan Control Relays	A loss of communication was detected between the controller and the fan control module.	Remote
6B6	Comm Loss: Starter	A loss of communication was detected between the controller and the module for starting the compressors.	Remote
6A0	Comm Loss: Op Status Programmable Relays	A loss of communication was detected between the controller and the alarm relays module.	Remote

Diagnostics
CH 530

Message	Description of Problem
Err2: RAM Pattern 1 Failure (Failure in the Controller's Memory)	An error was detected during memory test. Unplug the controller for some seconds and then turn it on again. If the error persists, the controller (DynaView) must be replaced.
Err2: RAM Pattern 2 Failure (Failure in the Controller's Memory)	An error was detected during memory test. Unplug the controller for some seconds and then turn it on again. If the error persists, the controller (DynaView) must be replaced.
Err2: RAM Addr Test # 1 Failure (Failure in the Controller's Memory)	An error was detected during memory test. Unplug the controller for some seconds and then turn it on again. If the error persists, the controller (DynaView) must be replaced.
Err2: RAM Addr Test # 2 Failure (Failure in the Controller's Memory)	An error was detected during memory test. Unplug the controller for some seconds and then turn it on again. If the error persists, the controller (DynaView) must be replaced.
No Application Present Please Load Application...	The controller is not loaded with the application software to make it possible to control the equipment's devices. It will be necessary to load up the software on the controller for adequate application for the equipment's model using the Tech V software.
MP: Invalid Configuration	The controller's configuration is not adequate to use together with the software installed in the controller.
MP Application Memory CRC Error	The software's selftest detected an error. Possible causes: The software of application was not completely loaded, there was a loss of part of the software, or the controller has a defect. Try reprogramming the controller.
App Present. Running Selftest.... Selftest Passed	Detected a valid application and carried out the selftest successfully.
App Present. Running Selftest.... Err3: CRC Failure (Failure with the Selftest)	Detected a valid application but also found a failure during selftest. The appropriate application for the equipment model should be loaded again using TechView. If the failure persists, the controller (DynaView) must be replaced.
A Valid Configuration is not Present	A valid configuration was not found in the controller. The appropriate configuration for the equipment model should be loaded using TechView.
Err4: UnHandled Interrupt Restart Timer: [3 sec countdown timer]	An unsupported interruption occurred during the processing of the application. This normally causes the equipment to shut down. When the counter reaches 0 seconds, the controller will reset the diagnostics and prepare the equipment to start up again.
Err5: Operating System Error Restart Timer: [3 sec countdown timer] (Operational System Error)	An operational error was detected while the equipment operated normally. When the counter reaches 0 seconds, the controller will reset the diagnostics and prepare the equipment to start up again.
Err6: Watch Dog Timer Error Restart Timer: [3 sec countdown timer]	An error was detected in the time control while the equipment operated normally. When the counter reaches 0 seconds, the controller will reset the diagnostics and prepare the equipment to start up again.
Err7: Unknown Error Restart Timer: [3 sec countdown timer]	An unknown error was detected while the equipment operated normally. When the counter reaches 0 seconds, the controller will reset the diagnostics and prepare the equipment to start up again.
Err8: Held in Boot by User Key Press [3 sec countdown timer]	The request to suspend the controller's software boot was detected, which was made by the user. This mode can be used to repair software error in the application code. Turn the controller off and then back on if this request was made accidentally.
Converter Mode	A command was received by the controller, by TechView, to hold the normal operation and actuate the Converter Mode, which will allow TechView to communicate with all the devices that belong to the control system.
Programming Mode	A command was received by the controller, by TechView, to erase the content from its non-volatile memory and receive the programming that the user wants to transfer.

Troubleshooting

A . CONDENSER FAN DOES NOT START

Symptoms	Possible Cause	Procedure
1. The voltmeter does not show a supply of energy.	1. No electrical energy.	1. Check the power source.
2. The voltmeter does not show a supply of energy to the contactors.	2. The disconnect is turned off.	2. Turn on the disconnect.
3. The voltmeter shows a voltage before the fuses, but not after them.	3. Burnt fuse.	3. Change the fuses. Check the motor's load.
4. The voltmeter shows a low	4. Low voltage.	4. Contact the Power Company.
5. Power is reaching the motor terminals, but it does not start.	5. Motor is burnt.	5. Replace the motor.
6. Check the commands to see if the coil of the contactor is not burnt.	6. Starter contactor does not close.	6. Fix it or change it.
7. The contactor does not receive power.	7. The contact of the overload relay is open.	7. Reset the overload relay.

B. COMPRESSOR DOES NOT START

Symptoms	Possible Cause	Procedure
1. An electrical circuit test shows that there is no power on the side of the line with the motor's starting	1. No power.	1. Check the power source.
2. An electrical circuit test shows that there is no power on the side of the line with the motor's starting	2. Disconnect is open.	2. Determine why the switch was open. If the system is in operational conditions, turn on the switch.
3. An electrical circuit test shows that there is power on the side of the line but not on the fuse load	3. Burnt fuse.	3. Replace the fuse. Check the motor's load.
4. The voltmeter shows a low voltage.	4. Low voltage.	4. Use a voltmeter to check and call the Power Company.
5. Power is reaching the motor terminals, but it does not start.	5. Motor is burnt.	5. Fix it or replace it.
6. Test to see if there are no burnt coils or split contacts.	6. The starter switch is broken.	6. Fix it or replace it.
7. The coil of the motor's starting switch does not receive energy.	7. Control circuit is open. 7.1. High-pressure switch 7.2. Low-pressure switch 7.3. Pressure limit switch 7.4. Motor protector 7.5. Interlocking circuit is open. 7.6. Turned off by the ambient	7. Locate which control turned off and why.
8. The compressor does not work.	8. The compressor is jammed or damaged.	8. Fix or replace the compressor.

Note: These troubleshooting procedures apply to the CGAD Standard units. Troubleshooting with optional components should be checked with the Technical Assistance Department at Trane do Brasil.

Troubleshooting

B. COMPRESSOR DOES NOT START (Cont.)

Symptoms	Possible Cause	Procedure
9. Contacts of the low-pressure switch are open.	9. Suction pressure is below the control point of the pressure regulator.	9. Check for loss of refrigerant, repair the leak, and recharge.
10. Contacts of the high-pressure switch are open. High pressure is	10. Discharge pressure is above the high-pressure control point.	10. See problem G.
11. The starter switch does not stay closed.	11. The contacts of the overload relay are open.	11. Reset the relay, the RCM, and check the cause.
12. The system does not start up.	12. Contacts of the flow switch are open.	12. Restore the water flow, check the operation of the flow switch. Check the switches.

C. COMPRESSOR WORKS INTERMITTENTLY

Symptoms	Possible Cause	Procedure
1. Operation is normal, but it stops and starts with great frequency.	1. Intermittent contact in the control circuit (bad electrical contact).	1. Repair or replace the defective control.
2. Same.	2. The differential of the low-pressure switch is too narrow.	2. Adjust the differential for normal working conditions.
3. The valve squeaks when closed. There is also a change in temperature on the refrigerant line	3. Leak on the solenoid valve of the liquid line.	3. Repair or replace.
4. Operation is normal, but it stops and starts with great frequency by the PB. Bubbles in the sight glass.	4. Lack of refrigerant.	4. Repair the leak of refrigerant and recharge.
5. Suction pressure is too low and ice is being formed on the dryer.	5. The dryer on the liquid line is plugged.	5. Replace the dryer nucleus.

D. COMPRESSOR WORKS WITHOUT STOPPING

Symptoms	Possible Cause	Procedure
1. High temperature in the conditioned area.	1. Excessive load.	1. Check if outside air is infiltrating the area. Check if the thermal insulation of the area is inadequate.
2. Low temperature in the conditioned area.	2. Thermostat is set to a temperature that is too low.	2. Readjust or fix.
3. Low temperature in the conditioned space.	3. Contacts of the starting switch are stuck.	3. Fix or replace the contactor.
4. Conditioned space is too cold.	4. The solenoid valve of the liquid line is open and stuck.	4. Fix or change the valve.

Note: These troubleshooting procedures apply to the CGAD Standard units. Troubleshooting with optional components should be checked with the Technical Assistance Department at Trane do Brasil.

Troubleshooting

E. COMPRESSOR OIL LEVEL IS TOO LOW

Symptoms	Possible Cause	Procedure
1. Oil level is too low.	1. Insufficient charge of oil.	1. Add a quantity of oil to the compressor that is sufficient for it.
2. Oil level falls gradually.	2. The filter dryer is plugged.	2. Replace the dryer filter.
3. Suction is too cold.	3. Bulb of the expansion valve is loose (poor thermal contact).	3. Make sure that there is a good contact between the remote bulb and the suction line.
4. Same and the compressor is making a lot of noise.	4. Flood back into the compressor.	4. Readjust the superheat, subcooling, or check the contact of the remote bulb on the expansion valve.
5. The starts and stops are too frequent.	5. The compressor turns on and off too frequently.	5. See the problems listed in problem B.

F. COMPRESSOR IS MAKING TOO MUCH NOISE

Symptoms	Possible Cause	Procedure
1. Rattling noise.	1. Lack of oil.	1. Add oil.
2. Loud noise.	2. Internal parts of the compressor are broken.	2. Change the compressor.
3. Suction line is too cold.	3. Flood back into the compressor.	3. Check and adjust the superheat. The valve may be too large or the remote bulb may be loose on the suction line.
4. The suction line is extremely cold. The compressor pings.		
	4. Expansion valve is stuck in the open position.	4. Fix it or replace it.

G. SYSTEM SHOWS A POOR PERFORMANCE

Symptoms	Possible Cause	Procedure
1. Expansion valve squeaks.	1. Bubbles in the liquid line.	1. Add refrigerant.
2. Change of temperature in the refrigerant line through the dryer filter or the key lock solenoid valve.	2. The filter dryer or the key lock solenoid valve is plugged.	2. Clean or replace.
3. Short cycle.	3. Expansion valve is stuck or clogged.	3. Fix or replace the expansion valve.
4. Superheat is too high.	4. The pressure drop in the evaporator is too much.	4. Check the superheat and readjust the expansion valve.
5. Insufflation temperature is too high or too low.	5. Superheat is inadequate.	5. Check the superheat. Adjust the expansion valve.
6. The air flow is reduced. The evaporating temperature is below zero.	6. Air filters are clogged.	6. Clean or replace.

Note: These troubleshooting procedures apply to the CGAD Standard units. Troubleshooting with optional components should be checked with the Technical Assistance Department at Trane do Brasil.

Troubleshooting

H. DISCHARGE PRESSURE IS TOO HIGH

Symptoms	Possible Cause	Procedure
1. High air temperature through the condenser.	1. Reduced air flow through the condenser.	1. Readjust the flow. Check for obstructions.
2. The air leaving the condenser is too cold. Small temperature increase through the condenser.	2. The condenser vanes are dirty.	2. Clean the vanes.
3. The air leaving the condenser is too hot.	3. Poor operation of the condenser fans.	3. Check the motors of the condenser fans.
4. The condenser is unusually hot and the discharge pressure is too high.	4. Non-condensable air or gases in the systems.	4. Transfer the refrigerant to the recycling. Make a new vacuum and charge the system.
5. Same as above.	5. Excessive refrigerant charge.	5. Gradually remove the excess refrigerant. The normal subcooling is between 6 and 10°C.
6. Dirty tubes in the condenser's shell and tube.	6. The water leaving the condenser is too cold. Small temperature increase through the condenser.	6. Clean the condenser tubes.
7. Poor operation of the cooling tower.	7. Water entering the condenser at high temperatures.	7. Check the fan motor of the tower, the starting device, and the thermostat.

I. DISCHARGE PRESSURE IS TOO LOW

Symptoms	Possible Cause	Procedure
1. Small temperature increase in the condenser water.	1. Excessive water flow through the condenser.	1. Readjust the flow and the pressure drop for the design.
2. Same for air.	2. Excessive air flow through the condenser.	2. Readjust the flow and the pressure drop for the design.
3. Bubbles in the sight glass.	3. Lack of refrigerant.	3. Repair the leak and charge.
4. The temperature of the air entering the condenser is too low.	4. Outdoor temperature is too cold.	4. Install an automatic pressure regulator.
5. Discharge or suction valves on the compressor are broken or leaking.	5. The suction pressure increases more quickly than 5 psig per minute after a downtime.	5. Remove the head, examine the valves, and replace those that are not working correctly.

Note: These troubleshooting procedures apply to the CGAD Standard units. Troubleshooting with optional components should be checked with the Technical Assistance Department at Trane do Brasil.

Troubleshooting

J. SUCTION PRESSURE IS TOO HIGH

Symptoms	Possible Cause	Procedure
1. Suction line is abnormally cold. Flood back into the compressor.	1. Excessive flow in the expansion valve.	1. Regulate and adjust the superheat of the expansion valve and check if the bulb is correctly fixed to the suction line.
2. Same as above	2. Expansion valve is stuck in the open position.	2. Fix or replace the expansion valve.
3. Charge is too much for the equipment.	3. Compressor is always on.	3.
4. Expansion valve is stuck.	4. Suction line is abnormally cold. Flood back into the compressor.	4. Fix or replace the valve.
5. Suction valves are broken on the compressor.	5. Noisy compressor.	5. Remove the head, examine the valves, and replace those that are not working.
6. Excessive flow in the expansion valve.	6. Suction line is abnormally cold. Flood back into the compressor.	6. Regulate and adjust the superheat of the expansion valve and check if the remote bulb is correctly fixed to the suction line.

K. SUCTION PRESSURE IS TOO LOW

Symptoms	Possible Cause	Procedure
1. Bubbles in the sight glass.	1. Lack of refrigerant.	1. Repair the leak and recharge.
2. Compressor kicks into short cycling.	2. Little thermal charge in the chiller.	2. See item B.
3. Change of temperature on the liquid line through the dryer or the key lock solenoid valve.	3. The liquid line dryer is clogged or there is a restriction on the solenoid valve.	3. Replace the dryer filter or the solenoid valve.
4. There is no refrigerant flow through the valve.	4. The remote bulb of the expansion valve lost its charge.	4. Replace the expansion valve.
5. Loss of capacity.	5. Expansion valve obstructed.	5. Clean the valve and replace if necessary.
6. Conditioned space is too cold.	6. The potentiometer of the RCM is set too low.	6. Adjust or fix as needed.
7. Superheat is too high.	7. The pressure drop through the chiller is too much.	7. Readjust the superheat.
8. Air flow is low.	8. Filter is clogged.	8. Clean or change the filter.

L. SCROLL COMPRESSOR IS USING TOO MUCH ENERGY

Symptoms	Possible Cause	Procedure
1. High temperature in the conditioned area.	1. Operating with too great of a thermal charge.	1. Check for air infiltrations and thermal insulation of the area.
2. Excessive consumption	2. Operating at a low voltage.	2. Make sure that the voltage is within the range of utilization. If not, contact the Power Company.
3. Excessive consumption	3. Overload relay trips.	3. Check operation. Change if necessary.

Note: These troubleshooting procedures apply to the CGAD Standard units. Troubleshooting with optional components should be checked with the Technical Assistance Department at Trane do Brasil.

Troubleshooting

M. SCROLL COMPRESSOR IS USING TOO LITTLE ENERGY

Symptoms	Possible Cause	Procedure
1. Little changes in the high and low pressures.	1. The compressor is turning counterclockwise.	1. Change two phases.
2. Suction pressure is extremely low.	2. Check restrictions and lack of refrigerant.	2. Eliminate leaks and complete charge. Eliminate restrictions.
3. Compressor does not pump and the suction and discharge pressures are low. The compressor is phased correctly.	3. Compressor is damaged.	3. Check the condition of the oil and change compressor.

N. THERMOSTAT COIL OPENS SCROLL COMPRESSOR

Symptoms	Possible Cause	Procedure
1. Compressor vibrates and makes noise.	1. The compressor is turning counterclockwise.	1. Change two phases.
2. Suction pressure is low.	2. Lack of gas and motor overheats.	2. Eliminate leaks and charge gas.
3. Suction pressure is low.	3. Compressor starts repeatedly, opening the motor's internal thermostat.	3. Same as above.

O. SCROLL COMPRESSOR WITH INCORRECT ELECTRICAL PHASING

Symptoms	Possible Cause	Procedure
1. Low amperage. The high and low pressures change very little. Rattling noises. Compressor vibrates too much.	1. The compressor is turning counterclockwise.	1. Change two phases.

Note: These troubleshooting procedures apply to the CGAD Standard units. Troubleshooting with optional components should be checked with the Technical Assistance Department at Trane do Brasil.

Standard Conversion Table

To convert from:	*To:*	*Multiply By:*
Length		
Feet (ft)	meters (m)	0,30481
Inche (in)	milimeters (mm)	25,4
Area		
Square feet (ft^2)	square meters(m^2)	0,93
Square inche(in^2)	square milimeters(mm^2)	645,2
Volume		
Cubic feet (ft^3)	cubic meters(m^3)	0,0283
Cubic Inches (in^3)	cubic milimeters (mm^3)	16387
Gallons (gal)	litres (L)	3,785
Gallons (gal)	cubic meters (m^3)	0,003785
Flow		
Cubic feet / min (cfm)	cubic meters / second (m^3/s)	0,000472
Cubic feet / min (cfm)	cubic meters / hour (m^3/h)	1,69884
Gallons / min (GPM)	cubic meters / hour (m^3/h)	0,2271
Gallons / min (GPM)	litres / second (L/s)	0,06308

To convert from:	*To:*	*Multiply By:*
Velocity		
Feet per minute (ft/min)	meters per second (m/s)	0,00508
Feet per second (ft/s)	meters per second (m/s)	0,3048
Energy, Power and Capacity		
British Termal Units (BTU)	Kilowatt (kW)	0,000293
British Termal Units (BTU)	Kilocalorie (kcal)	0,252
Tons (refrig. Effect)	Kilowatt (kW)	3,516
Tons (refrig. Effect)	Kilocalorie per hour (kcal/h)	3024
Horsepower (HP)	Kilowatt (kW)	0,7457
Pressão		
Feet of water (ft.H_2O)	Pascal (Pa)	2990
Inches os water (in.H_2O)	Pascal (Pa)	249
Pounds per square inch (PSI)	Pascal (Pa)	6895
Pounds per square inch (PSI)	Bar ou kg/cm^2	$6,895 \times 10^{-2}$
Peso		
Ounces (oz)	Kilograms (kg)	0,02835
Pounds (lbs)	Kilograms (kg)	0,4536

Temperature		
°C	C ou F	°F
-40,0	-40	-40
-39,4	-39	-38,2
-38,9	-38	-36,4
-38,3	-37	-34,6
-37,8	-36	-32,8
-37,2	-35	-31
-36,7	-34	-29,2
-36,1	-33	-27,4
-35,6	-32	-25,6
-35,0	-31	-23,8
-34,4	-30	-22
-33,9	-29	-20,2
-33,3	-28	-18,4
-32,8	-27	-16,6
-32,2	-26	-14,8
-31,7	-25	-13
-31,1	-24	-11,2
-30,6	-23	-9,4
-30,0	-22	-7,6
-29,4	-21	-5,8
-28,9	-20	-4
-28,3	-19	-2,2
-27,8	-18	-0,4
-27,2	-17	1,4
-26,7	-16	3,2
-26,1	-15	5
-25,6	-14	6,8
-25,0	-13	8,6
-24,4	-12	10,4
-23,9	-11	12,2
-23,3	-10	14
-22,8	-9	15,8
-22,2	-8	17,6
-21,7	-7	19,4
-21,1	-6	21,2
-20,6	-5	23
-20,0	-4	24,8
-19,4	-3	26,6
-18,9	-2	28,4
-18,3	-1	30,2
-17,8	0	32
-17,2	1	33,8
-16,7	2	35,6
-16,1	3	37,4
-15,6	4	39,2

Temperature		
°C	C ou F	°F
-15,0	5	41
-14,4	6	42,8
-13,9	7	44,6
-13,3	8	46,4
-12,8	9	48,2
-12,2	10	50
-11,7	11	51,8
-11,1	12	53,6
-10,6	13	55,4
-10,0	14	57,2
-9,4	15	59
-8,9	16	60,8
-8,3	17	62,6
-7,8	18	64,4
-7,2	19	66,2
-6,7	20	68
-6,1	21	69,8
-5,6	22	71,6
-5,0	23	73,4
-4,4	24	75,2
-3,9	25	77
-3,3	26	78,8
-2,8	27	80,6
-2,2	28	82,4
-1,7	29	84,2
-1,1	30	86
-0,6	31	87,8
0,0	32	89,6
0,6	33	91,4
1,1	34	93,2
1,7	35	95
2,2	36	96,8
2,8	37	98,6
3,3	38	100,4
3,9	39	102,2
4,4	40	104
5,0	41	105,8
5,6	42	107,6
6,1	43	109,4
6,7	44	111,2
7,2	45	113
7,8	46	114,8
8,3	47	116,6
8,9	48	118,4
9,4	49	120,2

Temperature		
°C	C ou F	°F
10,0	50	122
10,6	51	123,8
11,1	52	125,6
11,7	53	127,4
12,2	54	129,2
12,8	55	131
13,3	56	132,8
13,9	57	134,6
14,4	58	136,4
15,0	59	138,2
15,6	60	140
16,1	61	141,8
16,7	62	143,6
17,2	63	145,4
17,8	64	147,2
18,3	65	149
18,9	66	150,8
19,4	67	152,6
20,0	68	154,4
20,6	69	156,2
21,1	70	158
21,7	71	159,8
22,2	72	161,6
22,8	73	163,4
23,3	74	165,2
23,9	75	167
24,4	76	168,8
25,0	77	170,6
25,6	78	172,4
26,1	79	174,2
26,7	80	176
27,2	81	177,8
27,8	82	179,6
28,3	83	181,4
28,9	84	183,2
29,4	85	185
30,0	86	186,8
30,6	87	188,6
31,1	88	190,4
31,7	89	192,2
32,2	90	194
32,8	91	195,8
33,3	92	197,6
33,9	93	199,4
34,4	94	201,2

Temperature		
°C	C ou F	°F
35,0	95	203
35,6	96	204,8
36,1	97	206,6
36,7	98	208,4
37,2	99	210,2
37,8	100	212
38,3	101	213,8
38,9	102	215,6
39,4	103	217,4
40,0	104	219,2
40,6	105	221
41,1	106	222,8
41,7	107	224,6
42,2	108	226,4
42,8	109	228,2
43,3	110	230
43,9	111	231,8
44,4	112	233,6
45,0	113	235,4
45,6	114	237,2
46,1	115	239
46,7	116	240,8
47,2	117	242,6
47,8	118	244,4
48,3	119	246,2
48,9	120	248
49,4	121	249,8
50,0	122	251,6
50,6	123	253,4
51,1	124	255,2
51,7	125	257
52,2	126	258,8
52,8	127	260,6
53,3	128	262,4
53,9	129	264,2
54,4	130	266
55,0	131	267,8
55,6	132	269,6
56,1	133	271,4
56,7	134	273,2
57,2	135	275
57,8	136	276,8
58,3	137	278,6
58,9	138	280,4
59,4	139	282,2

Temperature		
°C	C ou F	°F
60,0	140	284
60,6	141	285,8
61,1	142	287,6
61,7	143	289,4
62,2	144	291,2
62,8	145	293
63,3	146	294,8
63,9	147	296,6
64,4	148	298,4
65,0	149	300,2
65,6	150	302
66,1	151	303,8
66,7	152	305,6
67,2	153	307,4
67,8	154	309,2
68,3	155	311
68,9	156	312,8
69,4	157	314,6
70,0	158	316,4
70,6	159	318,2
71,1	160	320
71,7	161	321,8
72,2	162	323,6
72,8	163	325,4
73,3	164	327,2
73,9	165	329
74,4	166	330,8
75,0	167	332,6
75,6	168	334,4
76,1	169	336,2
76,7	170	338
77,2	171	339,8
77,8	172	341,6
78,3	173	343,4
78,9	174	345,2
79,4	175	347
80,0	176	348,8
80,6	177	350,6
81,1	178	352,4
81,7	179	354,2
82,2	180	356
82,8	181	357,8
83,3	182	359,6
83,9	183	361,4
84,4	184	363,2

Trane optimizes the performance of homes and buildings around the world. A business of Ingersoll Rand, the leader in creating and sustaining safe, comfortable and energy efficient environments, Trane offers a broad portfolio of advanced controls and HVAC systems, comprehensive building services, and parts. For more information, visit www.trane.com.br

CGAD-SVN02B-EN October 2015
Supersedes CGAD-SVN02A-EN May 2015